EXPERIMENTAL INVESTIGATION OF TRUSS TYPE RIGID FRAMES INCLUDING CONNECTION STUDIES

VOLUME II
TH, CN, KN and CB TEST DATA

by

Ahmad Ghazanfari
and
Abolhassan Astaneh-Asl
Thomas M. Murray
Co-Principal Investigators

Submitted to

VULCRAFT
A Division of NuCor Corporation
Norfolk, Nebraska

Report No. FSEL/VULCRAFT 84-02

November 1984

FEARS STRUCTURAL ENGINEERING LABORATORY
School of Civil Engineering and Environmental Science
University of Oklahoma
Norman, Oklahoma 73019

TABLE OF CONTENTS

VOLUME II

APPENDIX B

TEE-HANGER TEST DATA
(TH TESTS)

VULCRAFT CONNECTION TEST SUMMARY

Project: VULCRAFT

Test No.: TH-1

Test Date: 2-8-84

Purpose: Verification of AISC design procedure

Number of Tension Bolts: 4 Bolt Gage(g): 5 1/2" Edge Distance: 1 1/4"

Bolt Diameter: 5/8" Flange Plate Thickness (t): 3/8

Plate Width (w): 8" Plate Length (de): 6"

Web Plate Thickness: 1"

Pretension Force per Bolt: 19 Kips

Failure Load, (Total Load): 34 Kips

Failure Mode: End plate yielding

Predicted Failure Loads:

Method: AISC (allow, load) Total Tensile Load: 6.92 Kips

Method: AISC (1.67) Total Tensile Load: 11.6 Kips

Maximum Plate Separation: North .0089" Centerline: .1501" South: .0958"

Load at Which Maximum Plate Separation is Measured: 34 Kips

Discussion:

Observations:

-Greater separation occurred on south side.

-At approximately 30.5 kips yielding was detected along bolt lines on both sides of web and across flange.

-Prior to 32 kips light was visible through plate separation.

-After removal from testing machine, yielding was detected below flange-to-web welds at interface of tee-hangers.

-Screws holding edge displacement transducers may have bent at approximately 32 kips resulting in erroneous plate separation measurements above this load level.

Loading:

-Maximum applied load was 34 kips.

-Maximum observed bolt force was 23.0 kips, south bolt (2 x AISC allowable = 27.0 kips).

-Maximum applied load was 4.9 times AISC predicted load and 2.9 times AISC load with factor of safety removed.

-Test was stopped after yield plateau developed on load vs. plate separation plot.

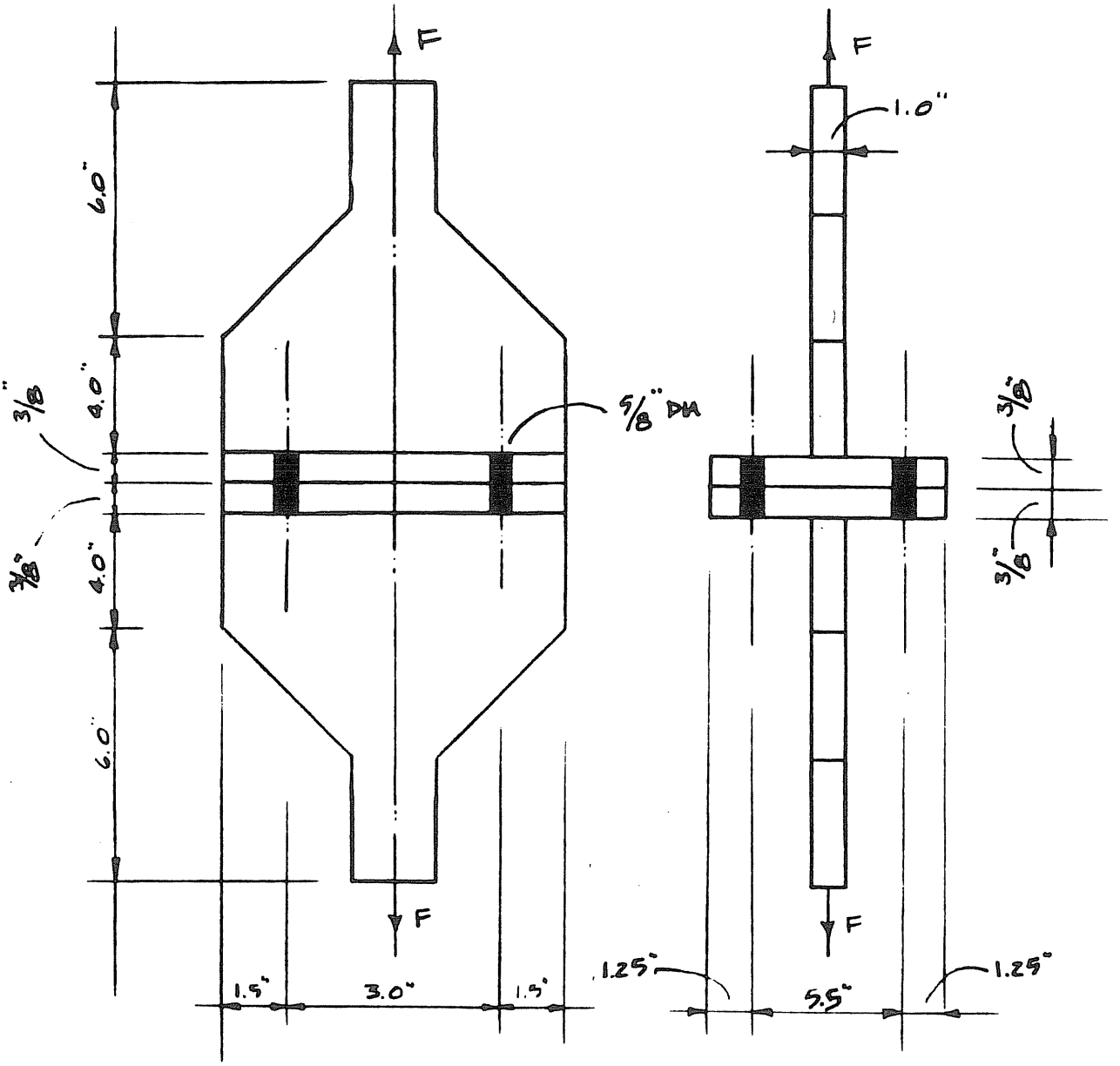

Figure B.1 Specimen Details, Test TH-1

Test TH-1
==========

Given:
---

tf=0.375 in.	(Thickness of flange in tee hanger)
a =1.250 in.	(Distance from bolt center to edge)
b =2.250 in.	(Distance from bolt center to web)
p =3.000 in.	(Width of tee hanger per bolt line)
Fy=36.00 ksi	(Yield stress of tee hanger plate)
Bolt type=A325	(Type of bolt. A325 or A490)
db=0.625 in.	(Diameter of Bolt)
B =27.00 kips.	(Ultimate capacity of bolt)
Fyb=88.00 kips.	(Yield stress of threaded bolt)
Ptb=18.90 kips.	(Pretension force in bolt=0.70 x B)

Solution:

According to the method outlined in Chapter 4 of the AISC Manual, the results are:

Service load capacity = 6.94 kips.
======

Service load capacity times 2.0= 13.88 kips.
======

Predicted failure mode is plate yielding

Predicted bolt force at factored load= 18.90 kips
======

According to the method outlined in THE SPLIT-TEE ANALOGY IN BOLTED SPLICES AND BEAM-COLUMN CONNECTIONS, by Kennedy et al published in Joints in Structural Steelwork, John Wiley & Sons, NY ,1981, pp.2.138-2.157, the results are:

Elastic load capacity = 6.73 kips
======

Ultimate load capacity = 15.49 kips
======

Predicted failure mode is plate yielding

Predicted bolt force at factored load= 18.90 kips
======

Figure B.2 AISC and Kennedy Analyses, Test TH-1

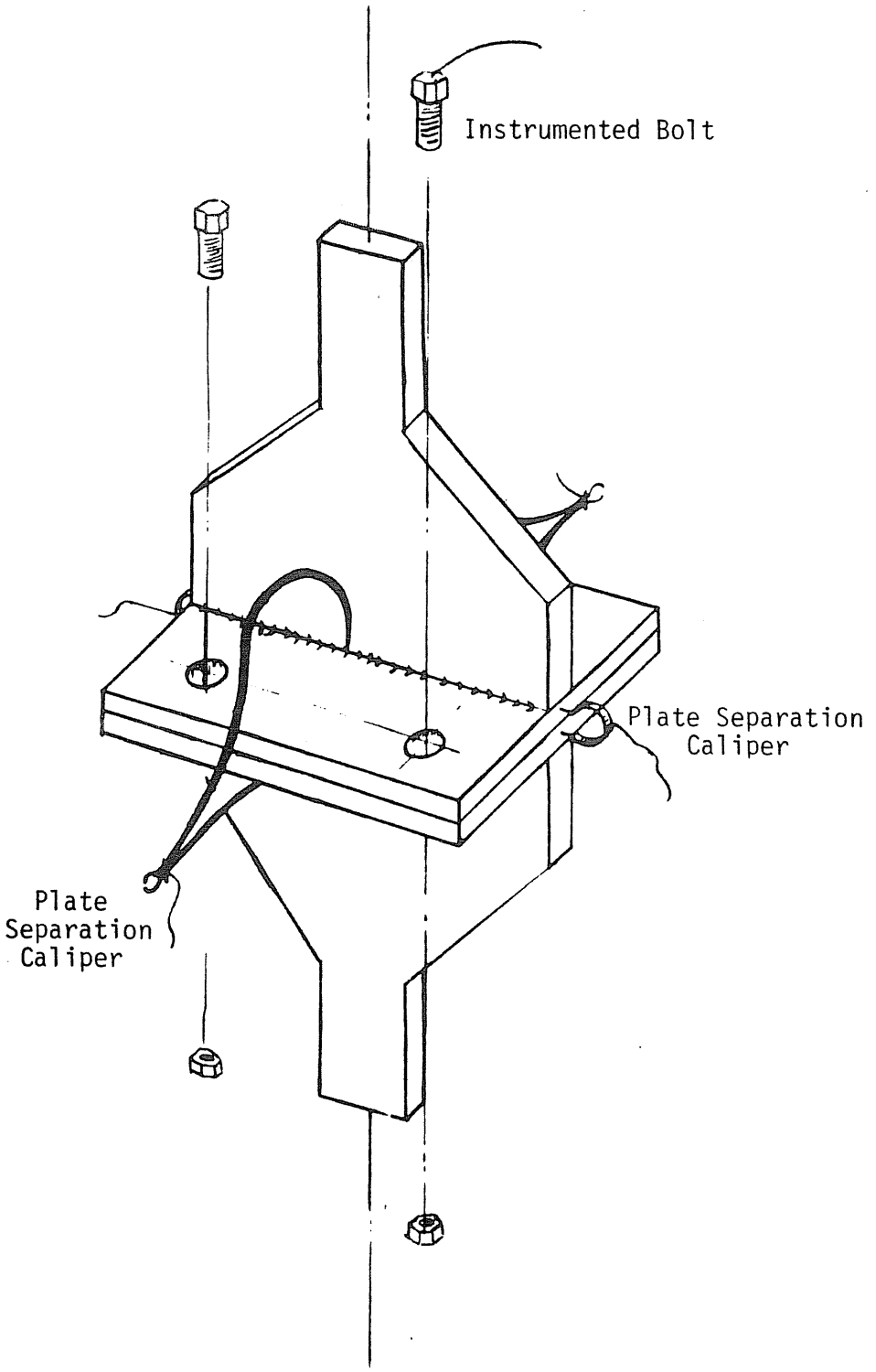

Figure B.3 Instrumentation, Test TH-1

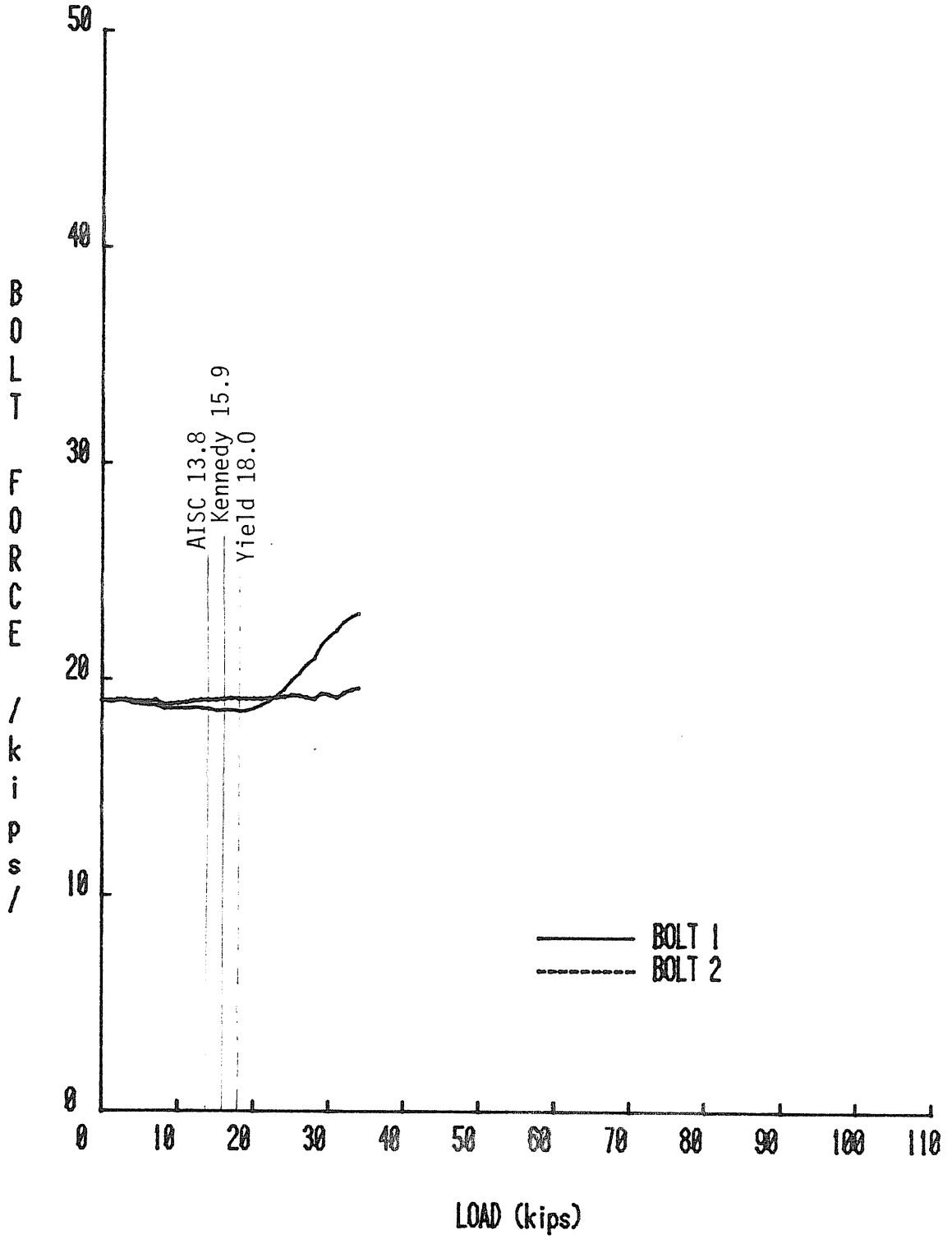

Figure B.4 Load vs. Bolt Force, TH-1

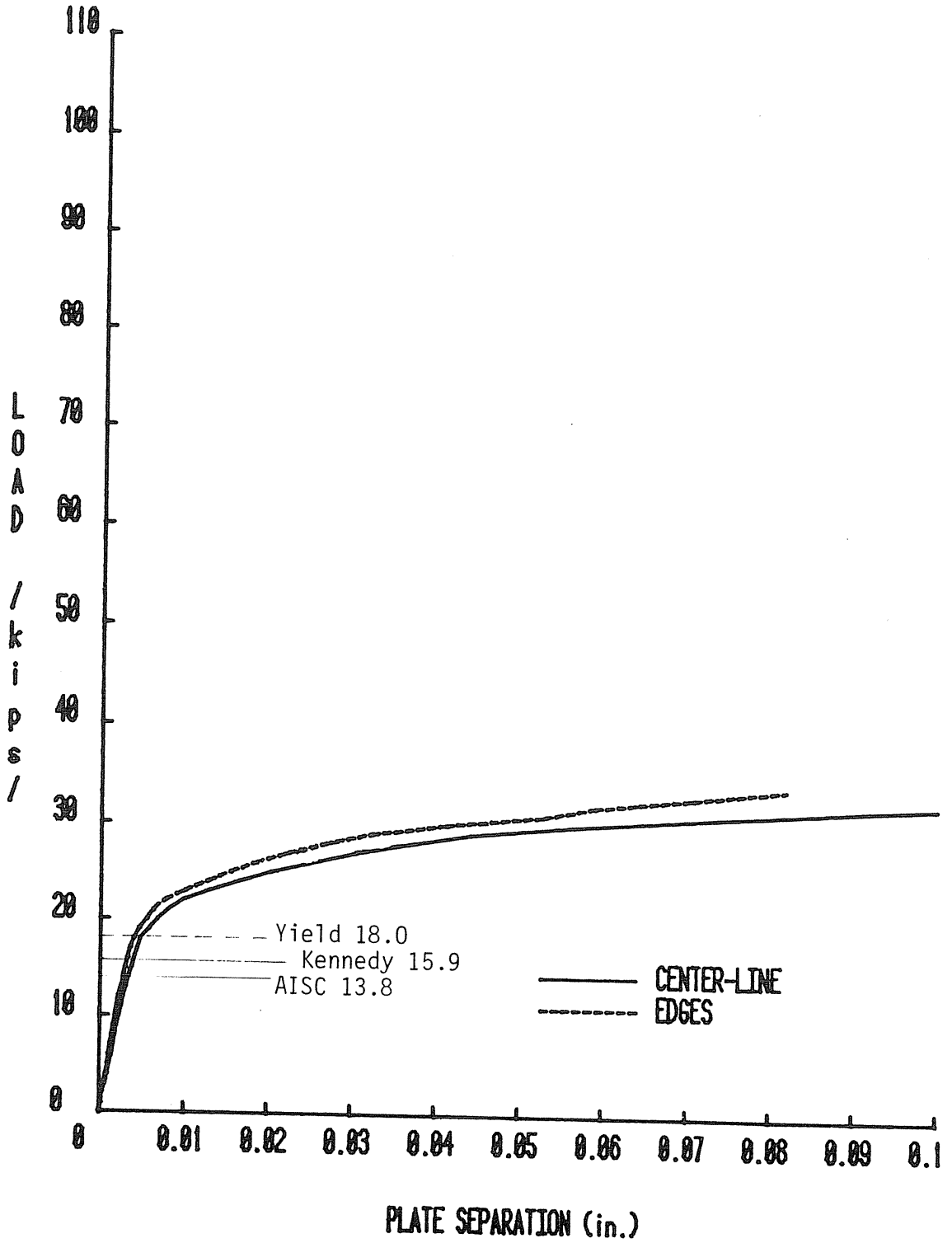

Figure B.5 Load vs. Plate Separation, TH-1

VULCRAFT CONNECTION TEST SUMMARY

Project: VULCRAFT

Test No.: TH-2

Test Date: 2/7/84

Purpose: Verification of AISC design procedure

Number of Tension Bolts: 4 Bolt Gage(g): 3 1/4" Edge Distance: 1 1/2"

Bolt Diameter: 5/8" Flange Plate Thickness (t): 1/2"

Plate Width (w): 6 1/4" Plate Length (de): 6"

Web Plate Thickness: 1"

Pretension Force per Bolt: 19 kips

Failure Load, (Total Load): 100.4 kips

Failure Mode: High bolt forces

Predicted Failure Loads:

Method: AISC (allow. load) Total Tensile Load: 29.4 kips

Method: AISC (1.67) Total Tensile Load: 49.0 kips

Maximum Plate Separation: North _____ Centerline: 0.367" South: _____

Load at Which Maximum Plate Separation is Measured: 100 kips

Discussion:

-Edge displacement transducers were removed prior to 75 kips, therefore, no edge plate separation values are recorded at the look level. At 70 kips the North plate separation was .0011" and the South was .0068".

-At end of test minimal localized yielding was detected in the immediate vicinity of the bolts; no major yield patterns were detected.

Loading:

-Maximum applied load was 100.4 kips

-Maximum observed bolt force was 33.6 kips, north bolt (2xAISC allowable = 27.0 kips)

-Maximum applied load was 3.4 times the AISC predicted load and 2.0 times the AISC load with factor of safety removed.

-Test was stopped when bolt forces increased at a rapidly increasing rate.

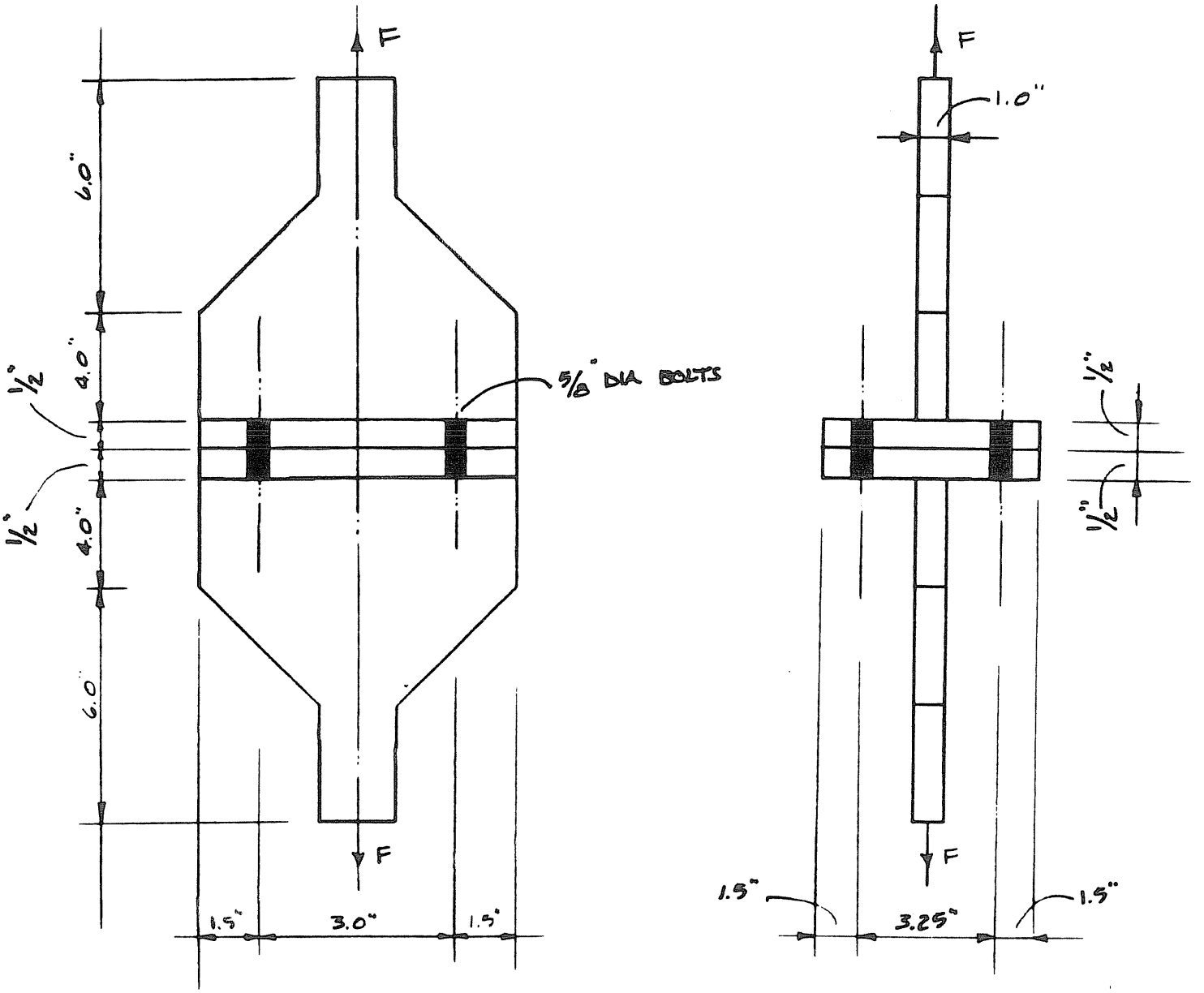

Figure B.6 Specimen Details, Test TH-2

Test TH-2
==========

Given:
---

tf=0.500 in.	(Thickness of flange in tee hanger)
a =1.500 in.	(Distance from bolt center to edge)
b =1.125 in.	(Distance from bolt center to web)
p =3.000 in.	(Width of tee hanger per bolt line)
Fy=36.00 ksi	(Yield stress of tee hanger plate)
Bolt type=A325	(Type of bolt. A325 or A490)
db=0.625 in.	(Diameter of Bolt)
B =27.00 kips.	(Ultimate capacity of bolt)
Fyb=88.00 kips.	(Yield stress of threaded bolt)
Ptb=18.90 kips.	(Pretension force in bolt=0.70 x B)

Solution:

According to the method outlined in Chapter 4 of the AISC Manual, the results are:

Service load capacity = 29.42 kips.
======

Service load capacity times 2.0= 58.85 kips.
======

Predicted failure mode is plate yielding

Predicted bolt force at factored load= 18.90 kips
======

According to the method outlined in THE SPLIT-TEE ANALOGY IN BOLTED SPLICES AND BEAM-COLUMN CONNECTIONS, by Kennedy et al published in Joints in Structural Steelwork, John Wiley & Sons, NY ,1981, pp.2.138-2.157, the results are:

Elastic load capacity = 23.57 kips
======

Ultimate load capacity = 46.06 kips
======

Predicted failure mode is plate yielding

Predicted bolt force at factored load= 18.90 kips
======

Figure B.7 AISC and Kennedy Analyses, Test TH-2

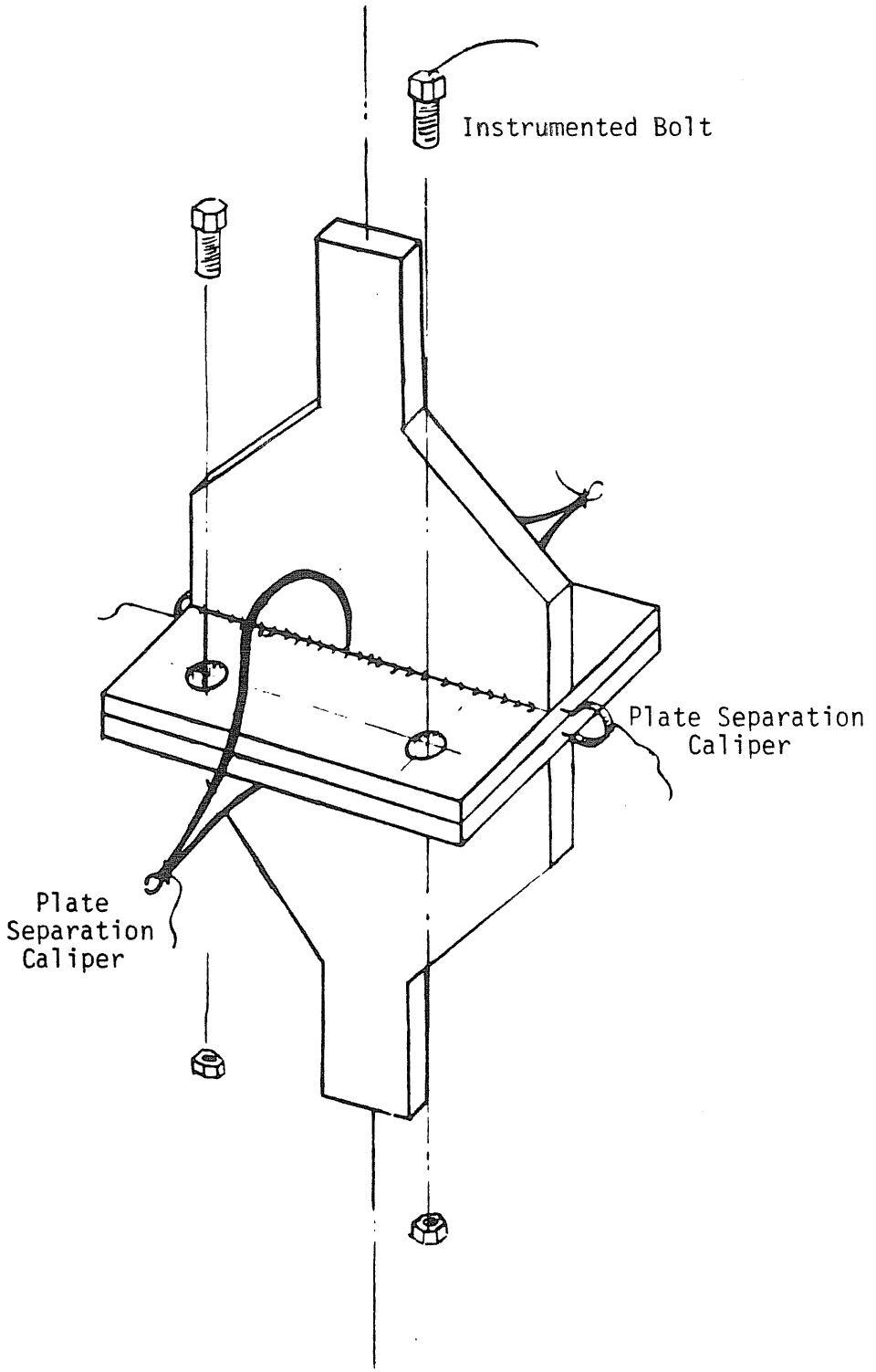

Figure B.8 Instrumentation, Test TH-2

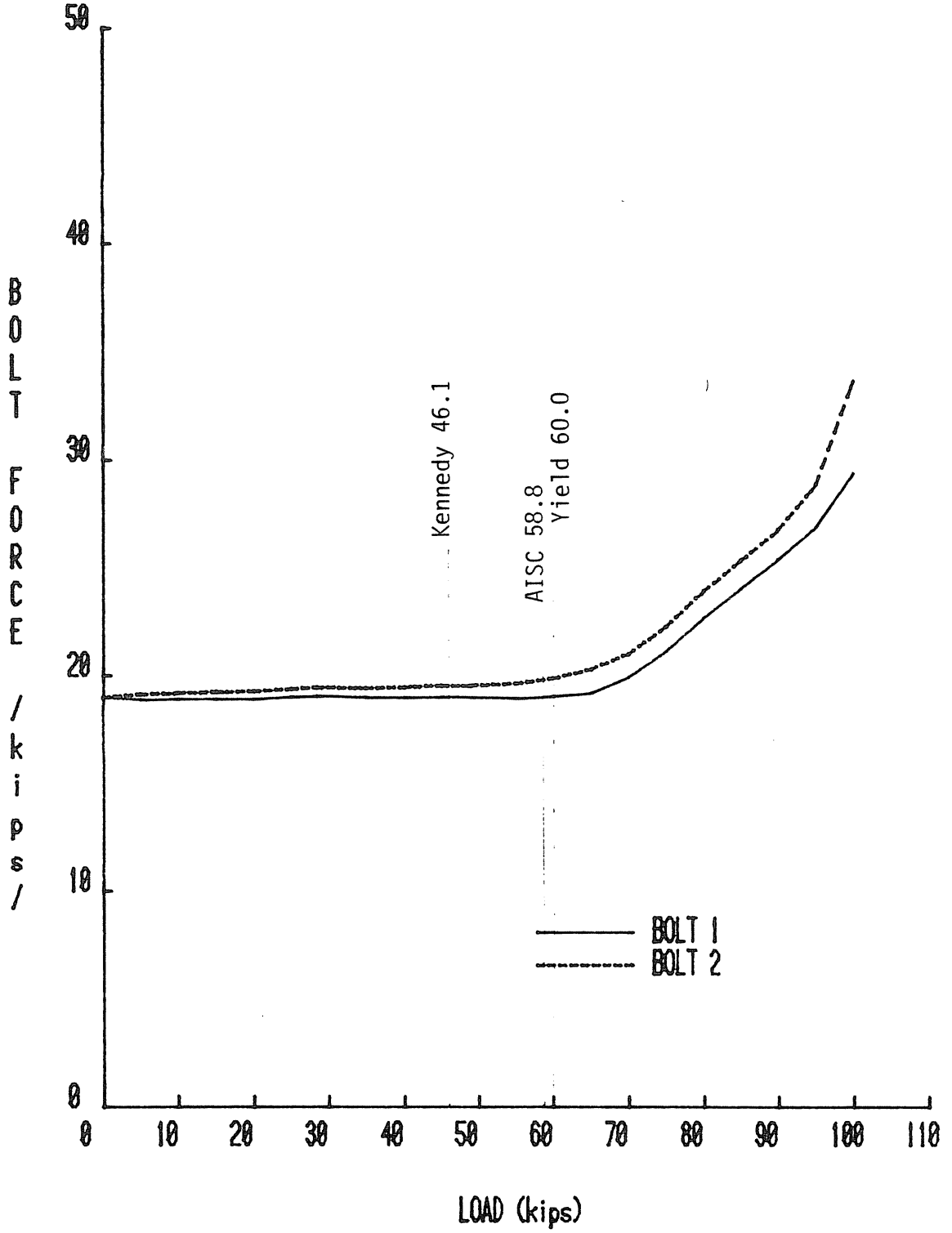

Figure B.9 Load vs. Bolt Force, TH-2

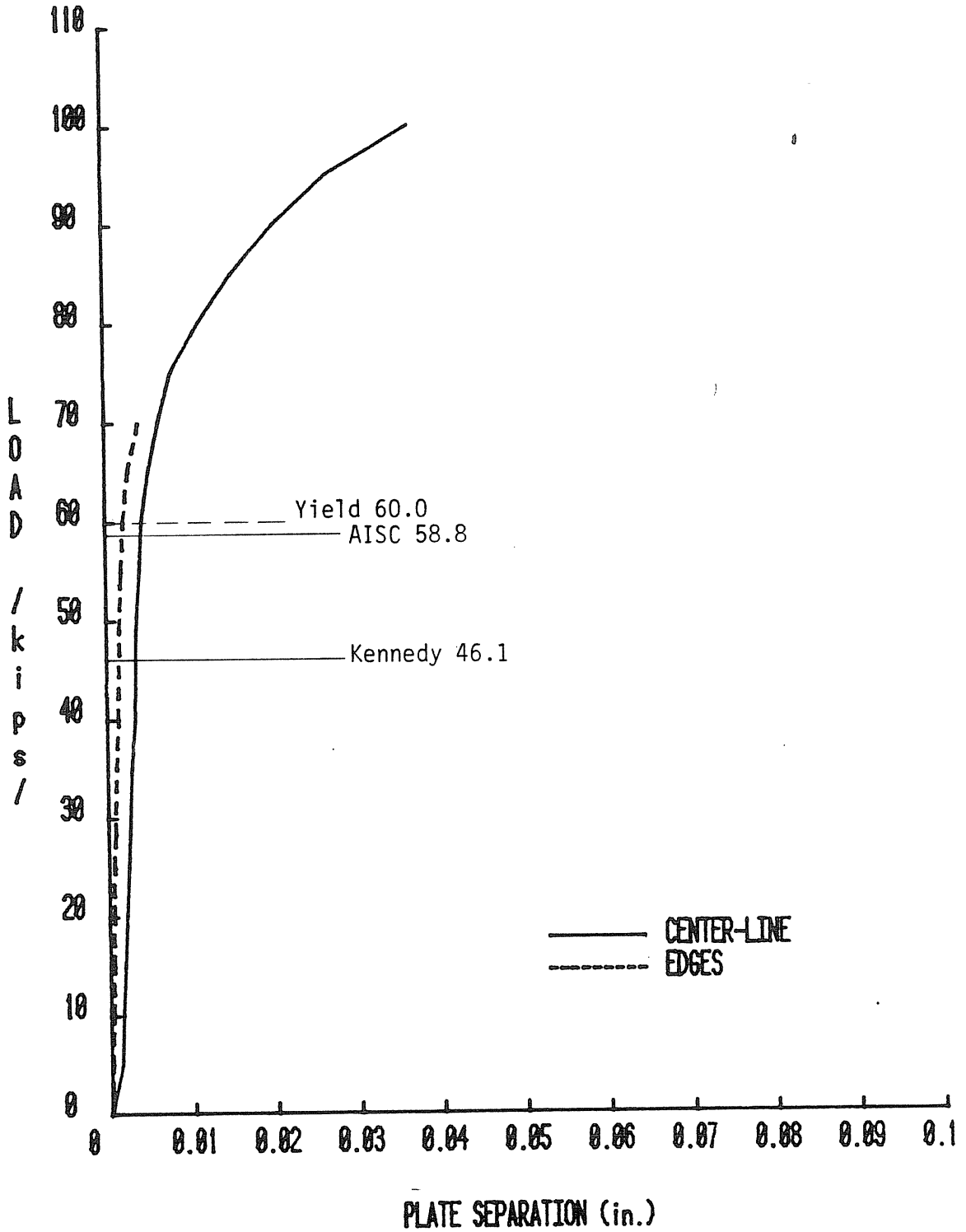

Figure B.10 Load vs. Plate Separation, TH-2

VULCRAFT CONNECTION TEST SUMMARY

Project: VULCRAFT

Test No.: TH-3

Test Date: 2/9/84

Purpose: Verification of AISC design procedure

Number of Tension Bolts: 4 Bolt Gage(g): 5 1/2" Edge Distance: 1 1/4"

Bolt Diameter: 5/8" Flange Plate Thickness (t): 1/2"

Plate Width (w): 8" Plate Length (de): 6"

Web Plate Thickness: 1"

Pretension Force per Bolt: 19 kips

Failure Load, (Total Load): 48 kips

Failure Mode: High bolt forces and end plate yielding

Predicted Failure Loads:

Method: AISC (allow. load) Total Tensile Load: 12.2 kips

Method: AISC (1.67) Total Tensile Load: 20.4 kips

Maximum Plate Separation: North .0714" Centerline: .0871" South: .0842"

Load at Which Maximum Plate Separation is Measured: 48 kips

Discussion:

-West flanges were slightly separated before bolts were tightened.

-North bolt was possibly pretensioned slightly above 19 kips.

Observations:

-Prior to 40 kips yielding was detected around all the bolts, more at the west bolts.

-At 43 kips light was visible through plate separation.

-At 44 kips development of a yield line was observed through the top west bolt line.

-At 47.4 kips development of yield lines was observed through the bottom west bolt line as well as through the top east bolt line and the yield line through the top west bolt line was well established.

-At maximum load, yield lines through all bolt lines were well established.

Loading:

-Maximum applied load was 48 kips.

-Maximum observed bolt force was 26.6 kips at 47.8 kips loading, south bolt (2xAISC allowable = 27.0 kips).

-Maximum applied load was 3.9 times AISC predicted load and 2.4 times AISC load with factor of safety removed.

-Test was stopped after yield plateau developed on load vs. plate separation plot; bolt forces were very high.

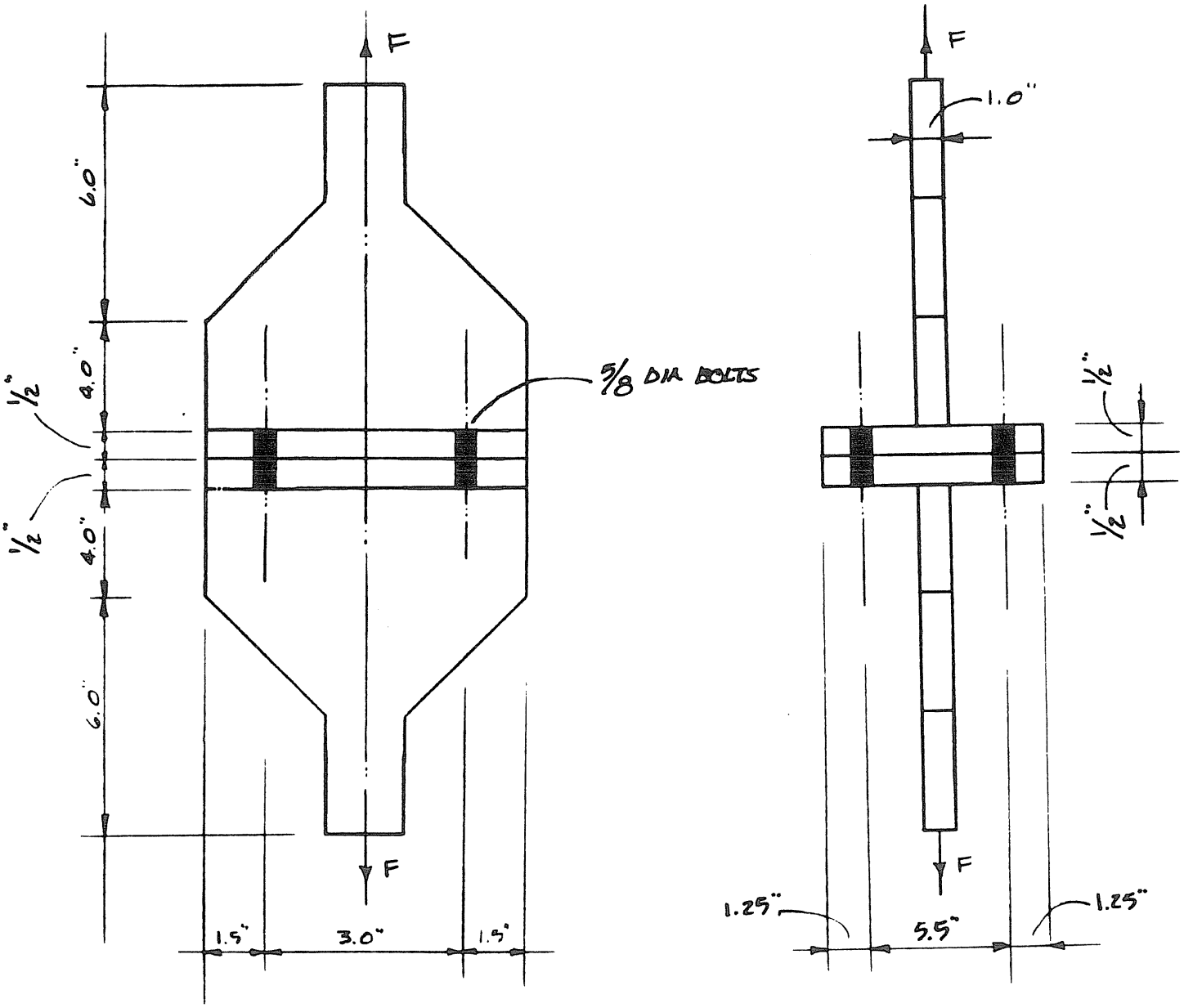

Figure B.11 Specimen Details, Test TH-3

Test TH-3
==========

Given:
---

tf=0.500 in.	(Thickness of flange in tee hanger)
a =1.250 in.	(Distance from bolt center to edge)
b =2.250 in.	(Distance from bolt center to web)
p =3.000 in.	(Width of tee hanger per bolt line)
Fy=36.00 ksi	(Yield stress of tee hanger plate)
Bolt type=A325	(Type of bolt. A325 or A490)
db=0.625 in.	(Diameter of Bolt)
B =27.00 kips.	(Ultimate capacity of bolt)
Fyb=88.00 kips.	(Yield stress of threaded bolt)
Ptb=18.90 kips.	(Pretension force in bolt=0.70 x B)

Solution:

According to the method outlined in Chapter 4 of the AISC Manual, the results are:

Service load capacity = 12.34 kips.
======

Service load capacity times 2.0= 24.68 kips.
======

Predicted failure mode is plate yielding

Predicted bolt force at factored load= 18.90 kips
======

According to the method outlined in THE SPLIT-TEE ANALOGY IN BOLTED SPLICES AND BEAM-COLUMN CONNECTIONS, by Kennedy et al published in Joints in Structural Steelwork, John Wiley & Sons, NY ,1981, pp.2.138-2.157, the results are:

Elastic load capacity = 11.94 kips
======

Ultimate load capacity = 24.46 kips
======

Predicted failure mode is plate yielding

Predicted bolt force at factored load= 18.90 kips
======

Figure B.12 AISC and Kennedy Analyses, Test TH-3

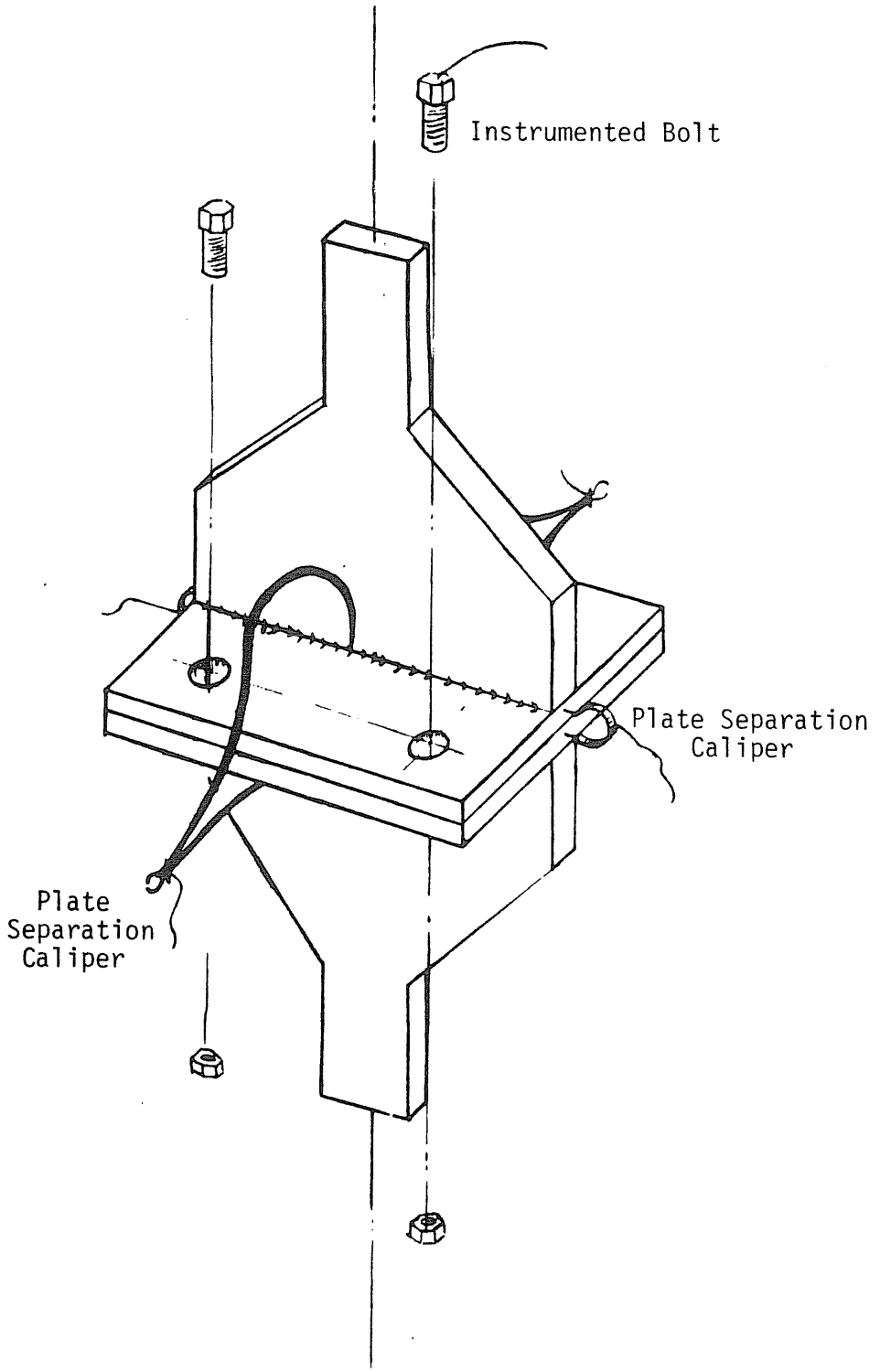

Figure B.13 Instrumentation, Test TH-3

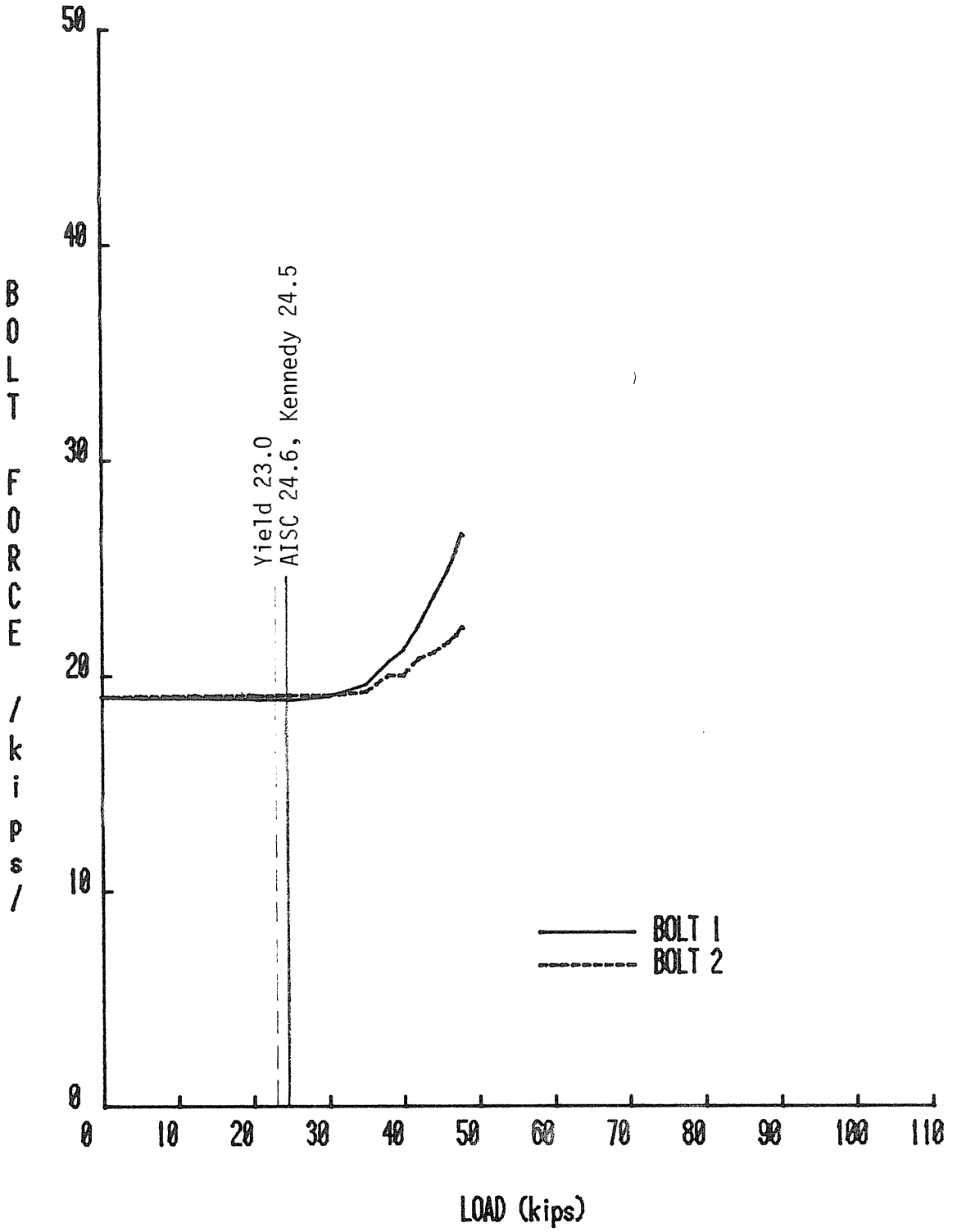

Figure B.14 Load vs. Bolt Force, TH-3

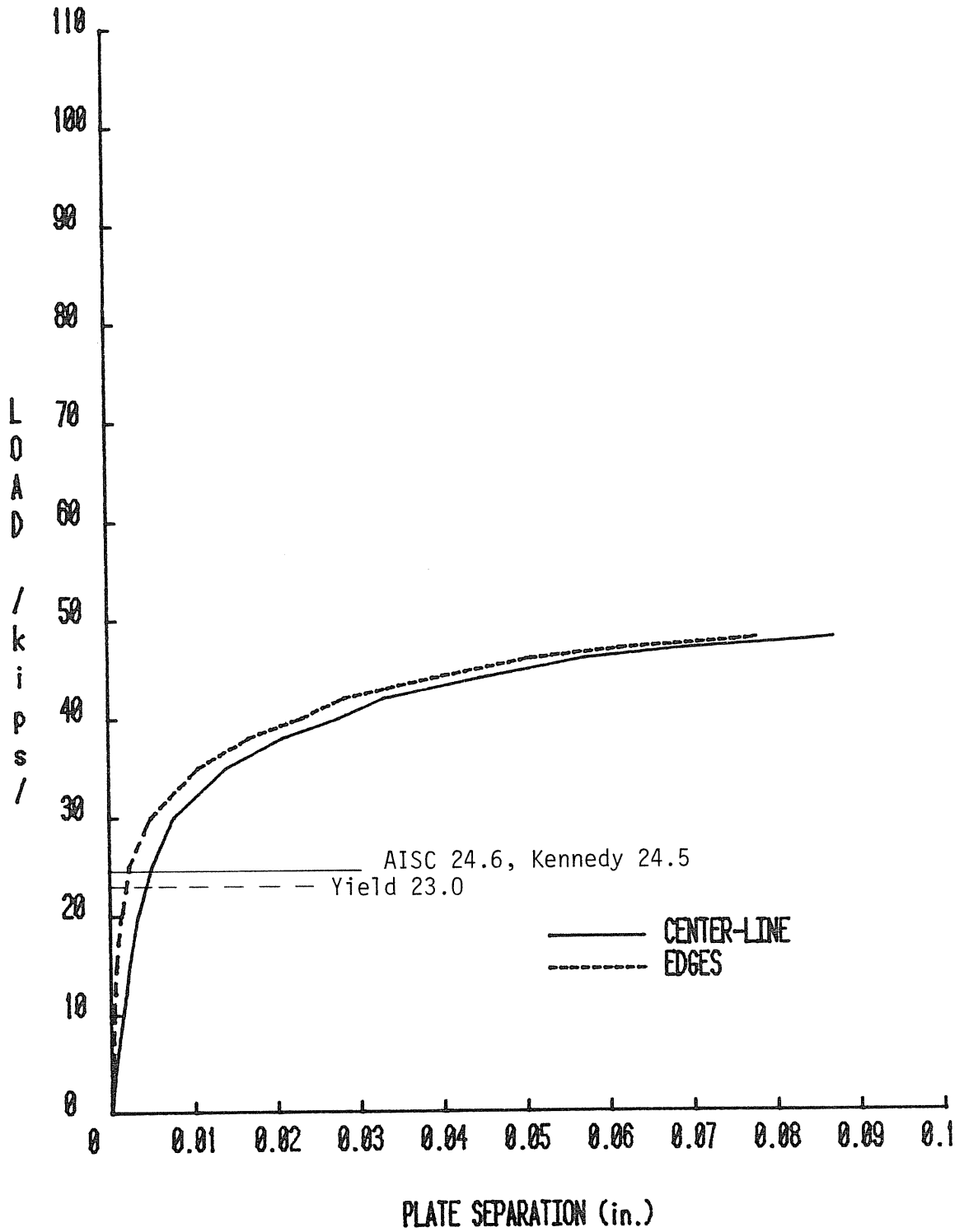

Figure B.15 Load vs. Plate Separation, TH-3

VULCRAFT CONNECTION TEST SUMMARY

Project: VULCRAFT

Test No.: TH-4

Test Date: 2/14/84

Purpose: Verification of AISC design procedure

Number of Tension Bolts: 4 **Bolt Gage(g):** 5 1/2" **Edge Distance:** 1 1/4"

Bolt Diameter: 3/4" **Flange Plate Thickness (t):** 1/2"

Plate Width (w): 8" **Plate Length (de):** 6"

Web Plate Thickness: 1"

Pretension Force per Bolt: 28 kips

Failure Load, (Total Load): 66.2 kips

Failure Mode: End-plate yielding

Predicted Failure Loads:

Method: AISC (allow. load) **Total Tensile Load:** 12.45 kips

Method: AISC (1.67) **Total Tensile Load:** 20.79 kips

Maximum Plate Separation: North 0.1303" Centerline: 0.1306" South: 0.1550"

Load at Which Maximum Plate Separation is Measured: 66 kips

Discussion:

Observations:

-Prior to 56 kips yielding was detected along the bolt lines of the bottom flanges on both the east and west sides. Localized yielding was detected in the immediate area of all bolts on the top flanges.

-At approximately 59 kips light was visible through the plate separation.

-At 60 kips yield lines were developing in top bolt lines on both sides, and the bottom yield lines were well established.

-At 64 kips top yield lines were well established.

Loading:

-Maximum applied load was 66.2 kips.

-Maximum observed bolt force was 36.1 kips, south bolt (2 x AISC allowable = 38.8 kips).

-Maximum applied load was 5.4 times AISC predicted load and 3.2 times AISC load with factor of safety removed.

-Test was stopped after yield plateau developed on load vs. plate separation plot.

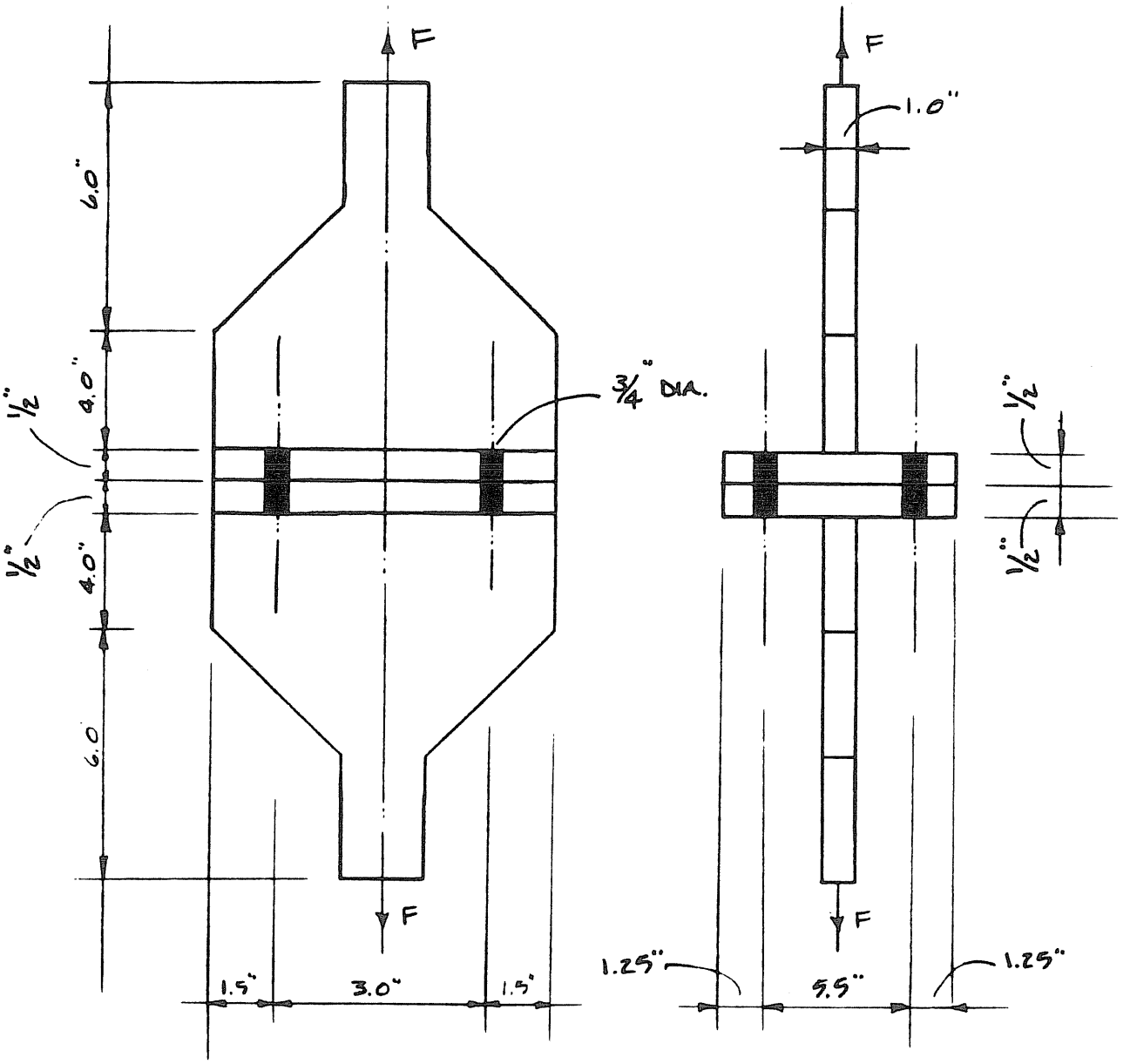

Figure B.16 Specimen Details, Test TH-4

Test TH-4
=========

Given:
---

tf=0.500 in.	(Thickness of flange in tee hanger)
a =2.250 in.	(Distance from bolt center to edge)
b =2.250 in.	(Distance from bolt center to web)
p =3.000 in.	(Width of tee hanger per bolt line)
Fy=36.00 ksi	(Yield stress of tee hanger plate)
Bolt type=A325	(Type of bolt. A325 or A490)
db=0.750 in.	(Diameter of Bolt)
B =38.88 kips.	(Ultimate capacity of bolt)
Fyb=88.00 kips.	(Yield stress of threaded bolt)
Ptb=27.21 kips.	(Pretension force in bolt=0.70 x B)

Solution:

According to the method outlined in Chapter 4 of the AISC Manual, the results are:

Service load capacity = 12.45 kips.
======

Service load capacity times 2.0= 24.90 kips.
======

Predicted failure mode is plate yielding

Predicted bolt force at factored load= 27.21 kips
======

According to the method outlined in THE SPLIT-TEE ANALOGY IN BOLTED SPLICES AND BEAM-COLUMN CONNECTIONS, by Kennedy et al published in Joints in Structural Steelwork, John Wiley & Sons, NY ,1981, pp.2.138-2.157, the results are:

Elastic load capacity = 11.94 kips
======

Ultimate load capacity = 26.57 kips
======

Predicted failure mode is plate yielding

Predicted bolt force at factored load= 27.21 kips
======

Figure B.17 AISC and Kennedy Analyses, Test TH-4

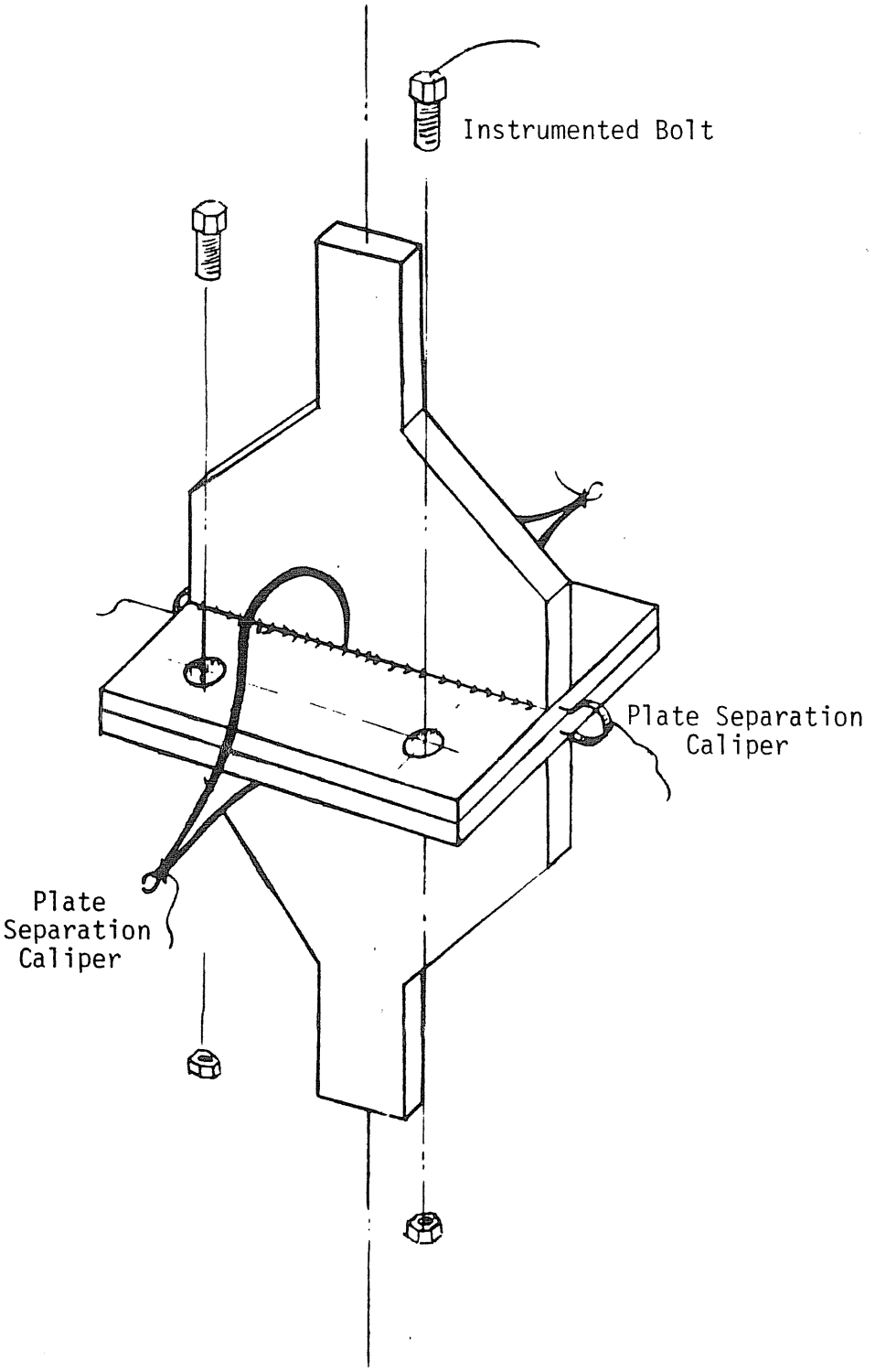

Figure B.18 Instrumentation, Test TH-4

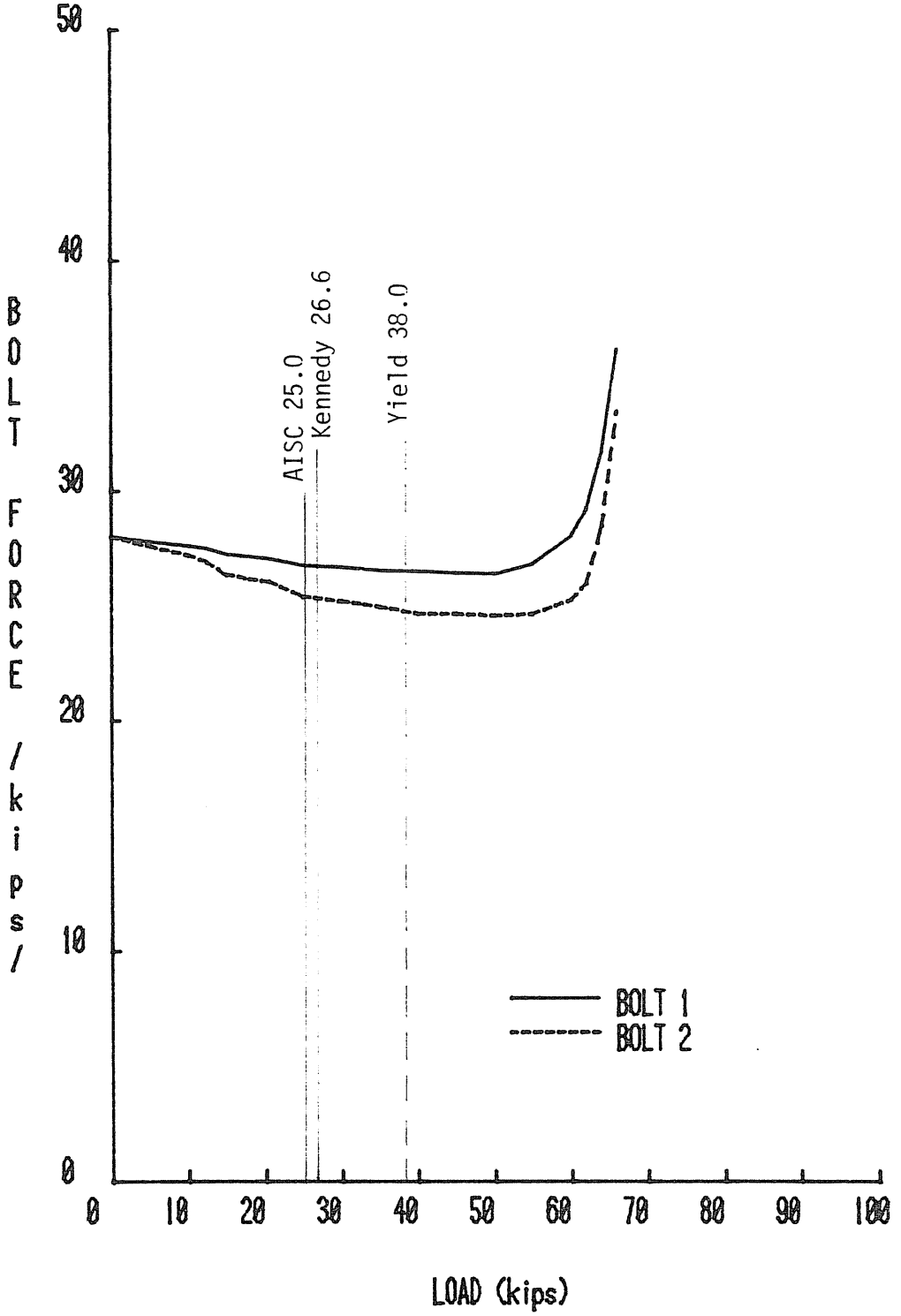

Figure B.19 Load vs. Bolt Force, TH-4

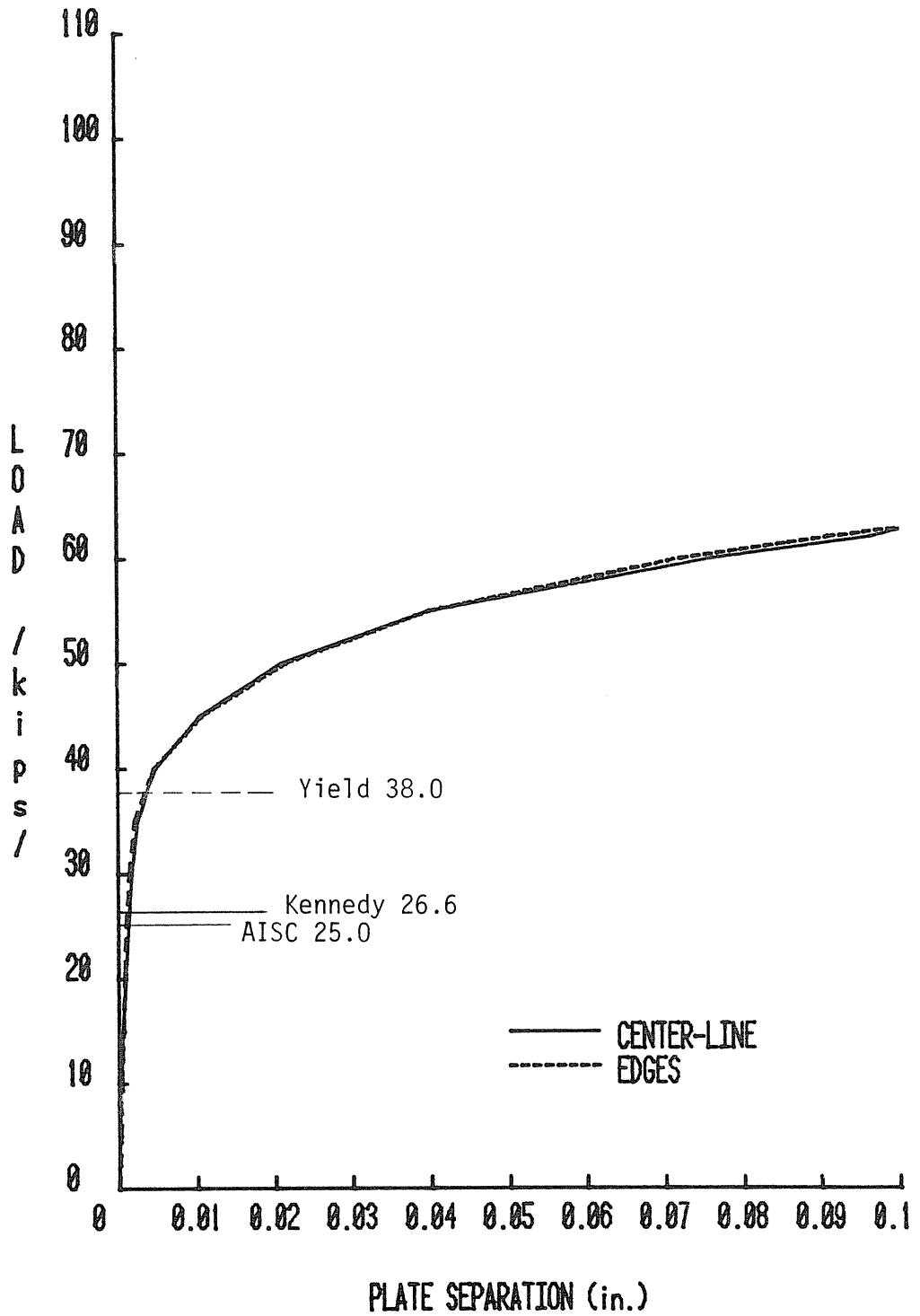

Figure B.20 Load vs. Plate Separation, TH-4

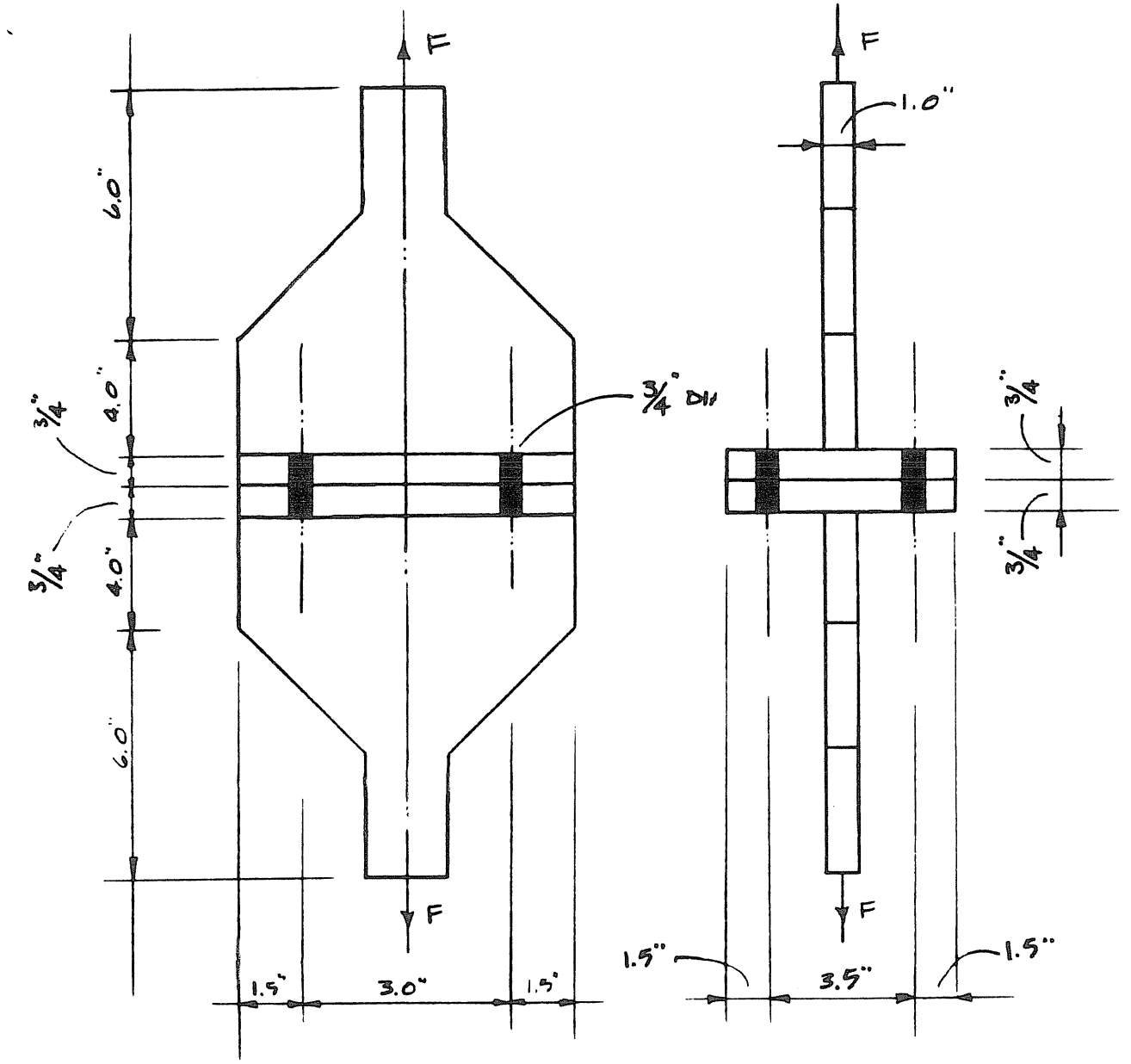

Figure B.21 Specimen Details, Test TH-5

VULCRAFT CONNECTION TEST SUMMARY

Project: VULCRAFT

Test No.: TH-5

Test Date: 2-2-84

Purpose: Verification of AISC design procedure

Number of Tension Bolts: 4 **Bolt Gage(g):** 3 1/2" **Edge Distance:** _____

Bolt Diameter: 3/4" **Flange Plate Thickness (t):** 3/4"

Plate Width (w): 6 1/2" **Plate Length (de):** 6"

Web Plate Thickness: 1"

Pretension Force per Bolt: 28 kips

Failure Load, (Total Load): 176 kips

Failure Mode: Rupture of bolts

Predicted Failure Loads:

Method: AISC **Total Tensile Load:** 61.0 kips

Method: AISC (1.67) **Total Tensile Load:** 102.0 kips

Maximum Plate Separation: North 0.0151" Centerline: 0.0294" South: 0.0121"

Load at Which Maximum Plate Separation is Measured: 110 k

Discussion:

Observations:

-Greater separation occured on the north side.

-Instrumentation was removed at 110 kips and then the system was loaded to failure. Uninstrumented bolts were installed.

-Failure occured at 176 kips with rupture of both south bolts.

-Small yield lines were observed along the weld line before failure.

-Yield lines were observed along the stem.

Loading:

-Maximum applied load was 176 kips.

-Maximum observed bolt force was approximately 35.5 kips at 110 kips load.

-Failure load was 2.89 times AISC predicted load and 1.73 times AISC load with factor of safety removed.

-Failure was due to bolt rupture.

Test TH-5
=========

Given:
---

tf=0.750 in.	(Thickness of flange in tee hanger)
a =1.500 in.	(Distance from bolt center to edge)
b =1.250 in.	(Distance from bolt center to web)
p =3.000 in.	(Width of tee hanger per bolt line)
Fy=36.00 ksi	(Yield stress of tee hanger plate)
Bolt type=A325	(Type of bolt. A325 or A490)
db=0.750 in.	(Diameter of Bolt)
B =38.88 kips.	(Ultimate capacity of bolt)
Fyb=88.00 kips.	(Yield stress of threaded bolt)
Ptb=27.21 kips.	(Pretension force in bolt=0.70 x B)

Solution:

According to the method outlined in Chapter 4 of the AISC Manual, the results are:

Service load capacity = 60.03 kips.
======

Service load capacity times 2.0=120.05 kips.
======

Predicted failure mode is plate yielding

Predicted bolt force at factored load= 35.92 kips
======

According to the method outlined in THE SPLIT-TEE ANALOGY IN BOLTED SPLICES AND BEAM-COLUMN CONNECTIONS, by Kennedy et al published in Joints in Structural Steelwork, John Wiley & Sons, NY ,1981, pp.2.138-2.157, the results are:

Elastic load capacity = 47.04 kips
======

Ultimate load capacity = 83.23 kips
======

Predicted failure mode is plate yielding

Predicted bolt force at factored load= 27.21 kips
======

Figure B.22 AISC and Kennedy Analyses, Test TH-5

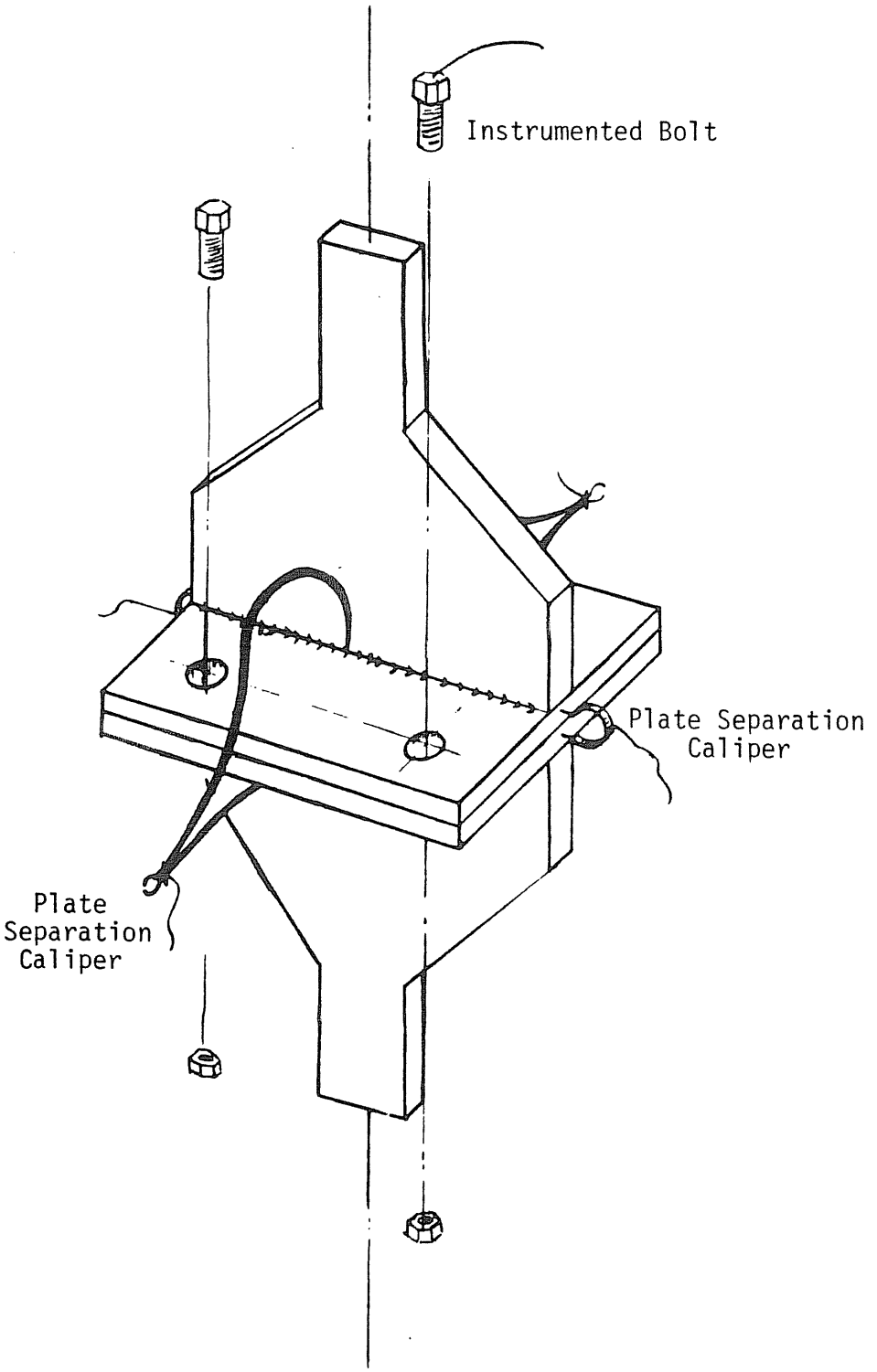

Figure B.23 Instrumentation, Test TH-5

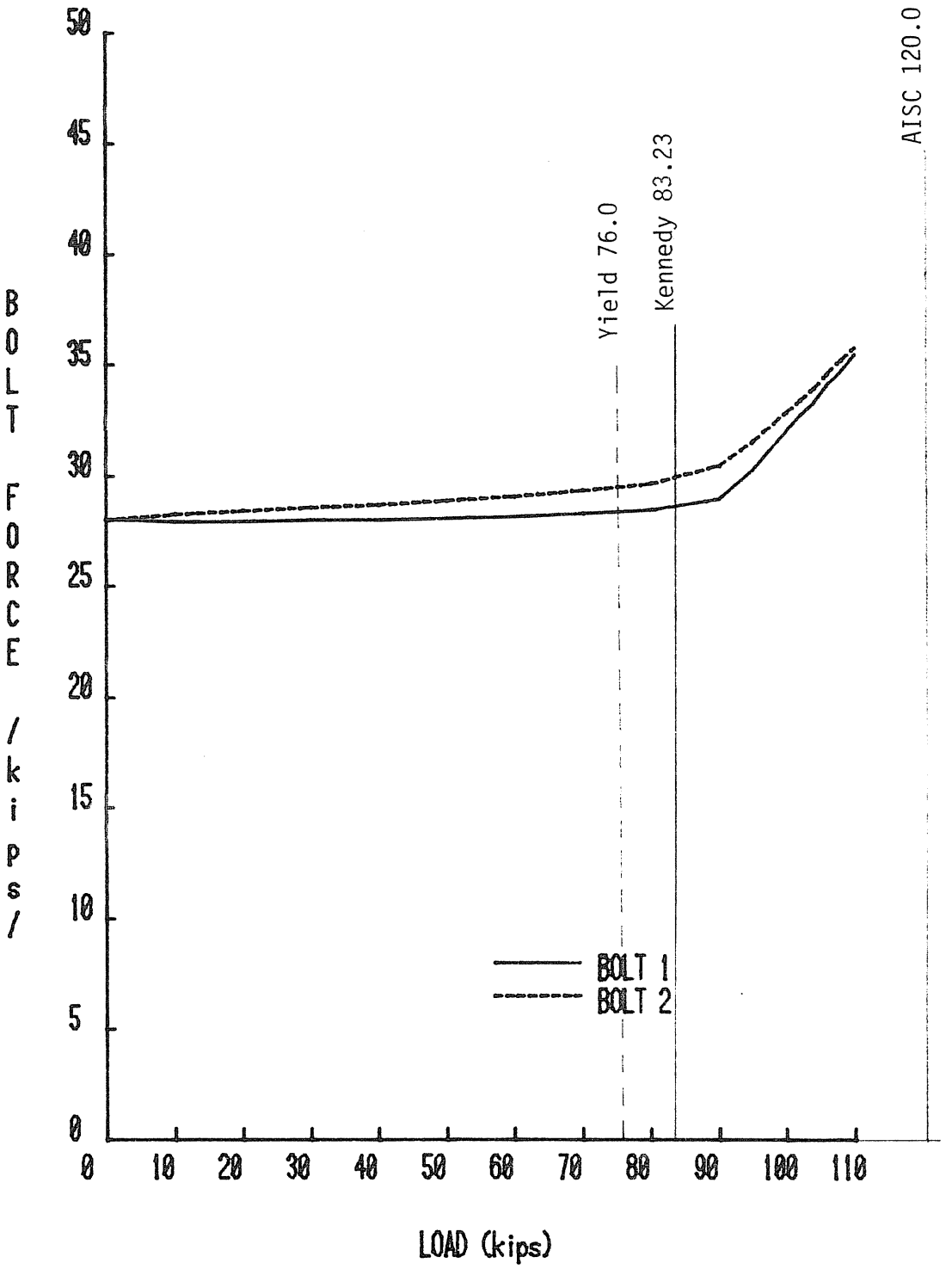

Figure B.24 Load vs. Bolt Force, TH-5

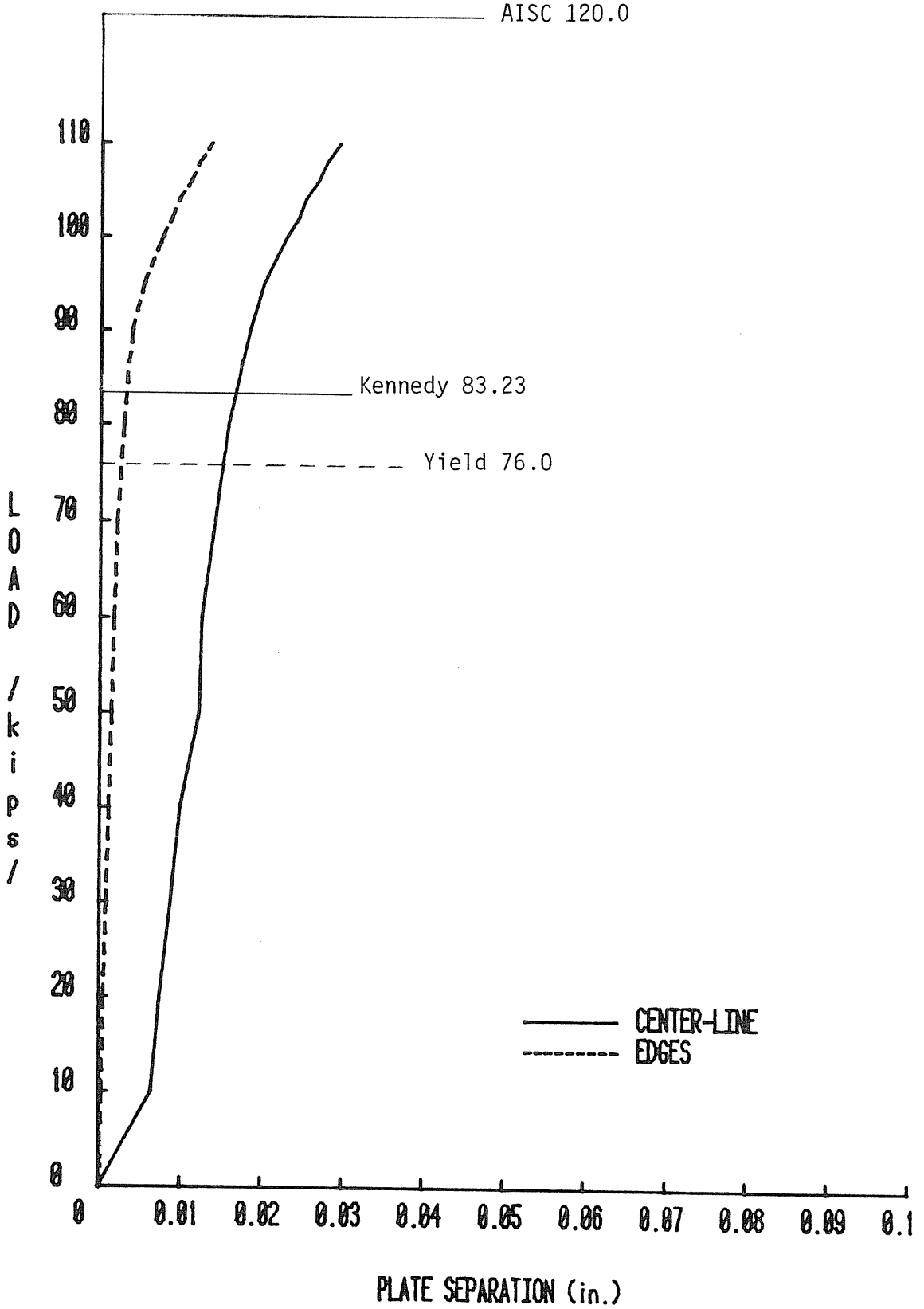

Figure B.25 Load vs. Plate Separation, TH-5

VULCRAFT CONNECTION TEST SUMMARY

Project: VULCRAFT

Test No.: TH-6

Test Date: 2/7/84

Purpose: Verification of AISC design procedure

Number of Tension Bolts: 4 Bolt Gage(g): 5 1/2" Edge Distance: 1 1/4"

Bolt Diameter: 3/4" Flange Plate Thickness (t): 3/4"

Plate Width (w): 8" Plate Length (de): 6"

Web Plate Thickness: 1"

Pretension Force per Bolt: 28 kips

Failure Load, (Total Load): 90.5 kips

Failure Mode: Yielding of end plate and high bolt forces

Predicted Failure Loads:

Method: AISC (allow. load) Total Tensile Load: 28.0 kips

Method: AISC (1.67) Total Tensile Load: 48.0 kips

Maximum Plate Separation: North _____ Centerline: 0.508 South: _____

Load at Which Maximum Plate Separation is Measured: 85 kips

Discussion:

-Edge displacement transducers were removed prior to 75 kips and the center-line displacement transducers were removed prior to 90 kips; no displacement values are given for the maximum load of 90.5 kips. At 72.4 kips the North edge displacement was measured at 0.0211" and the South edge displacement was measured at 0.0259". The centerline displacement for 85 kips is given above.

Observations:

-At 72.4 kips yielding was detected in the immediate vicinity of the bolts.

Loading:

-Maximum applied load was 90.5 kips.

-Maximum observed bolt force was 44.6 kips, North bolt (2xAISC allowable = 38.8 kips).

-Maximum applied load was 3.2 times AISC predicted load and 1.9 times AISC load with factor of safety removed.

-Test was stopped after yield plateau was reached and bolt forces had become very high.

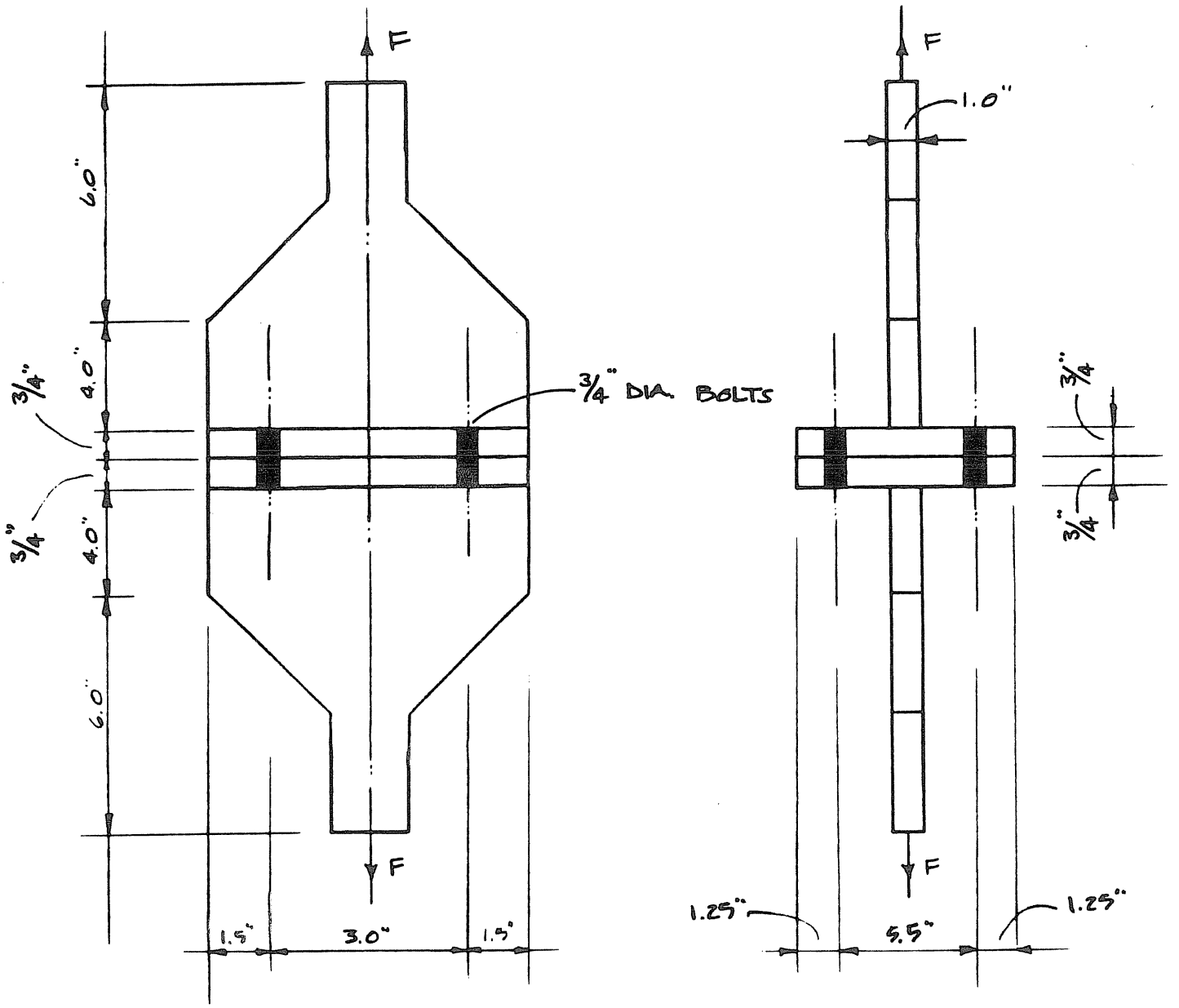

Figure B.26 Specimen Details, Test TH-6

Test TH-6
==========

Given:
---

tf=0.750 in.	(Thickness of flange in tee hanger)
a =1.250 in.	(Distance from bolt center to edge)
b =2.250 in.	(Distance from bolt center to web)
p =3.000 in.	(Width of tee hanger per bolt line)
Fy=36.00 ksi	(Yield stress of tee hanger plate)
Bolt type=A325	(Type of bolt. A325 or A490)
db=0.750 in.	(Diameter of Bolt)
B =38.88 kips.	(Ultimate capacity of bolt)
Fyb=88.00 kips.	(Yield stress of threaded bolt)
Ptb=27.21 kips.	(Pretension force in bolt=0.70 x B)

Solution:

According to the method outlined in Chapter 4 of the AISC Manual, the results are:

Service load capacity = 28.01 kips.
======

Service load capacity times 2.0= 56.03 kips.
======

Predicted failure mode is plate yielding

Predicted bolt force at factored load= 27.21 kips
======

According to the method outlined in THE SPLIT-TEE ANALOGY IN BOLTED SPLICES AND BEAM-COLUMN CONNECTIONS, by Kennedy et al published in Joints in Structural Steelwork, John Wiley & Sons, NY ,1981, pp.2.138-2.157, the results are:

Elastic load capacity = 26.72 kips
======

Ultimate load capacity = 50.75 kips
======

Predicted failure mode is plate yielding

Predicted bolt force at factored load= 27.21 kips
======

Figure B.27 AISC and Kennedy Analyses, Test TH-6

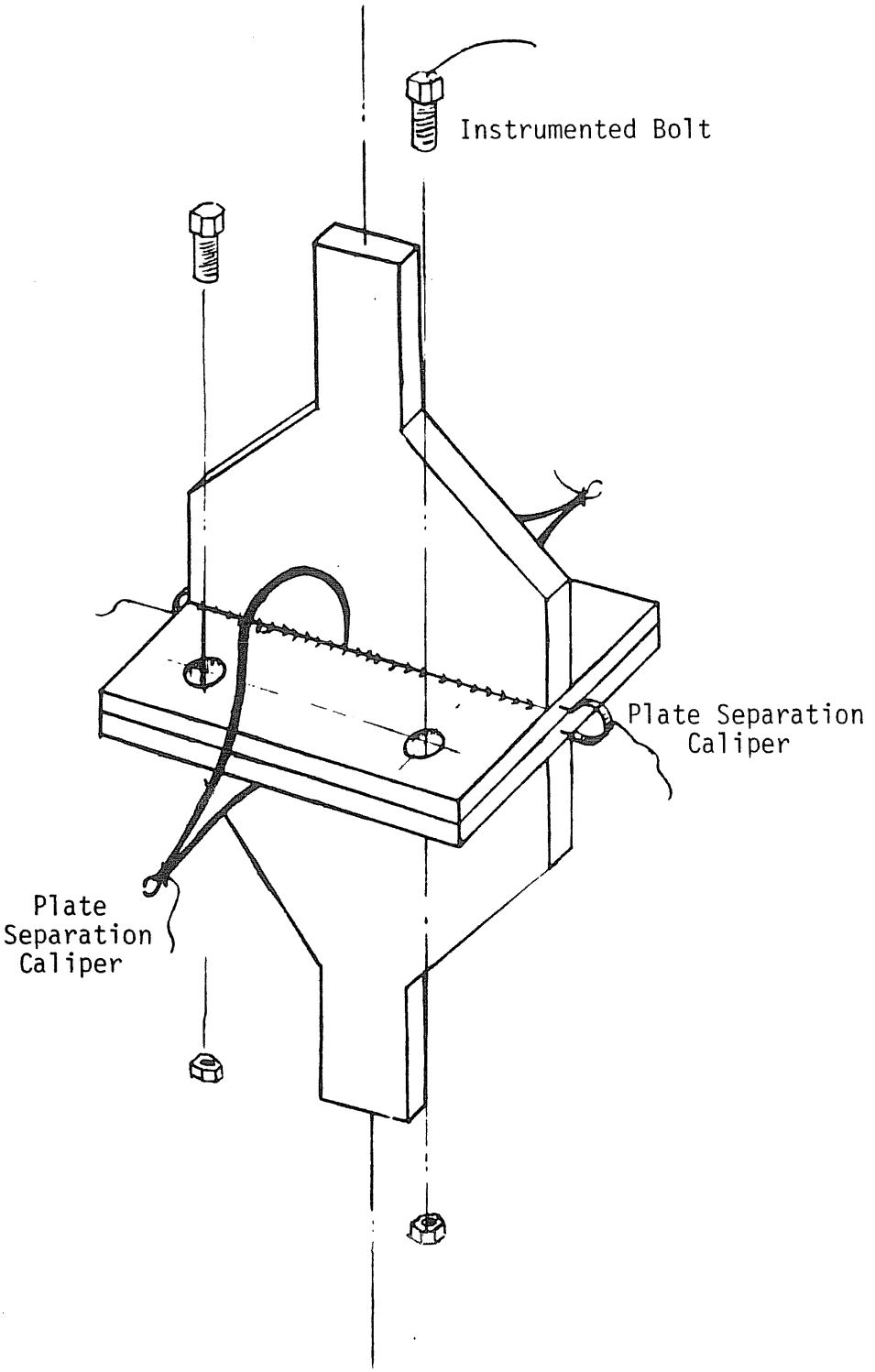

Figure B.28 Instrumentation, Test TH-6

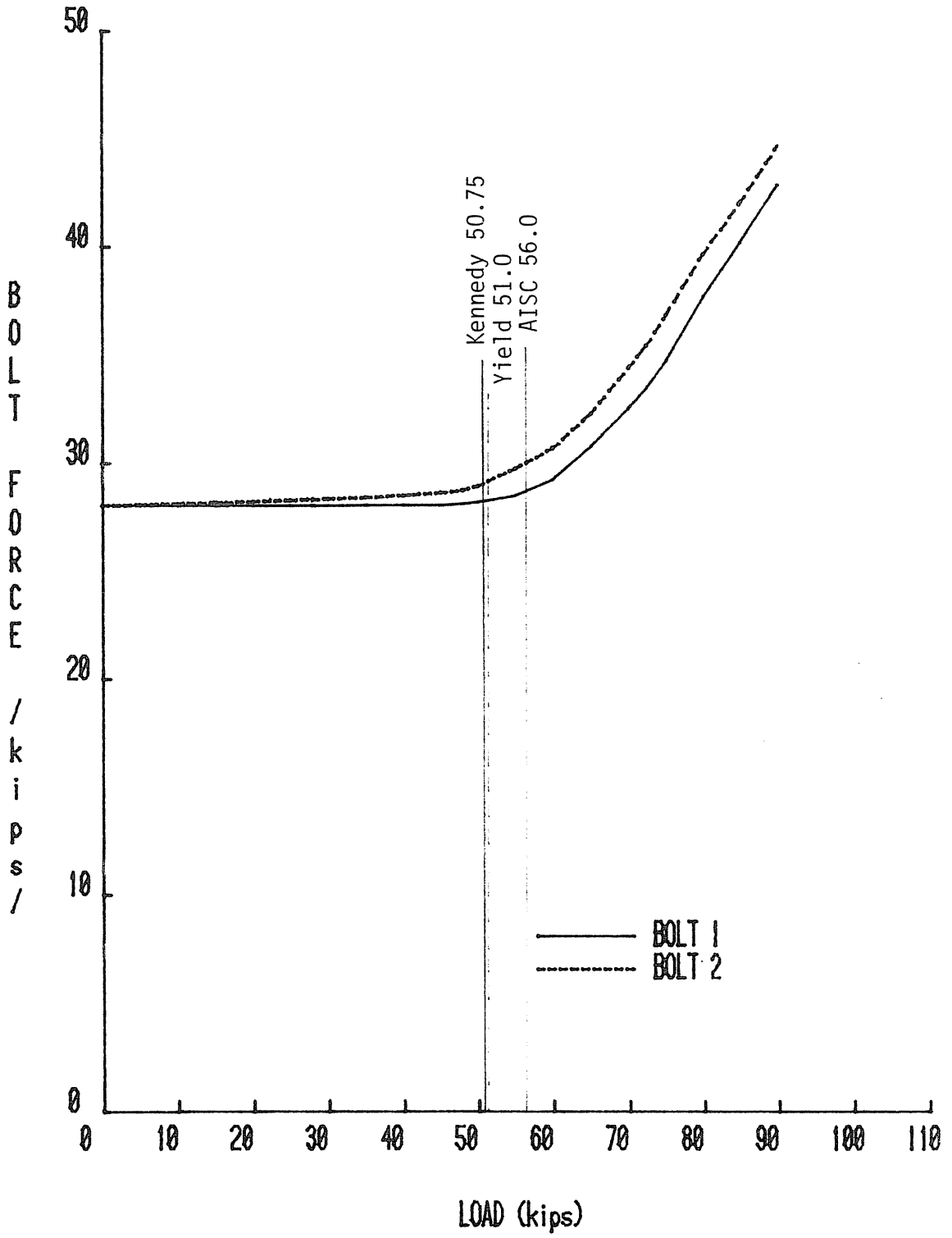

Figure B.29 Load vs. Bolt Force, TH-6

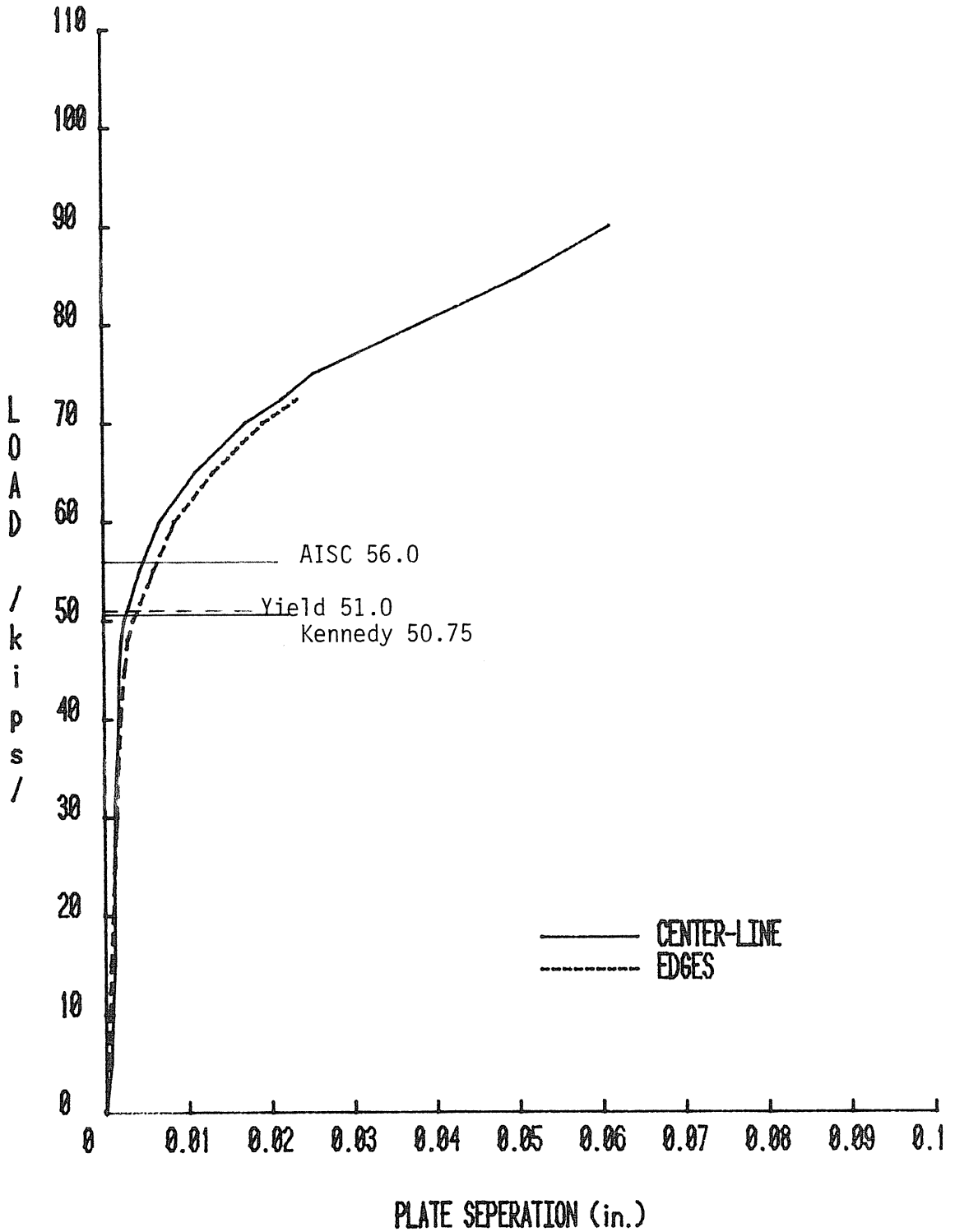

Figure B.30 Load vs. Plate Separation, TH-6

VULCRAFT CONNECTION TEST SUMMARY

Project: VULCRAFT

Test No.: TH-7

Test Date: 2/7/84

Purpose: Verification of AISC design procedure

Number of Tension Bolts: 4 Bolt Gage(g): 6" Edge Distance: 1 1/2"

Bolt Diameter: 1" Flange Plate Thickness (t): 3/4"

Plate Width (w): 9" Plate Length (de): 6"

Web Plate Thickness: 1"

Pretension Force per Bolt: 51 kips

Failure Load, (Total Load): 105 kips

Failure Mode: End plate yielding and high bolt forces

Predicted Failure Loads:

Method: AISC (allow. load) Total Tensile Load: 25.0 kips

Method: AISC (1.67) Total Tensile Load: 41.67 kips

Maximum Plate Separation: North .0862 Centerline: .0847" South: .0714

Load at Which Maximum Plate Separation is Measured: 105 kips

Discussion:

Observations:

-At 95 kips load light was visible through plate separation.

Loading:

-Maximum applied load was 105 kips.

-Maximum observed bolt force was 63.2 kips, south bolt (2xAISC allowable = 69.2 kips).

-Maximum applied load was 4.2 times AISC predicted load and 2.5 times AISC load with factor of safety removed.

-Test was stopped after yield plateau was reached and bolt forces increased to a high level.

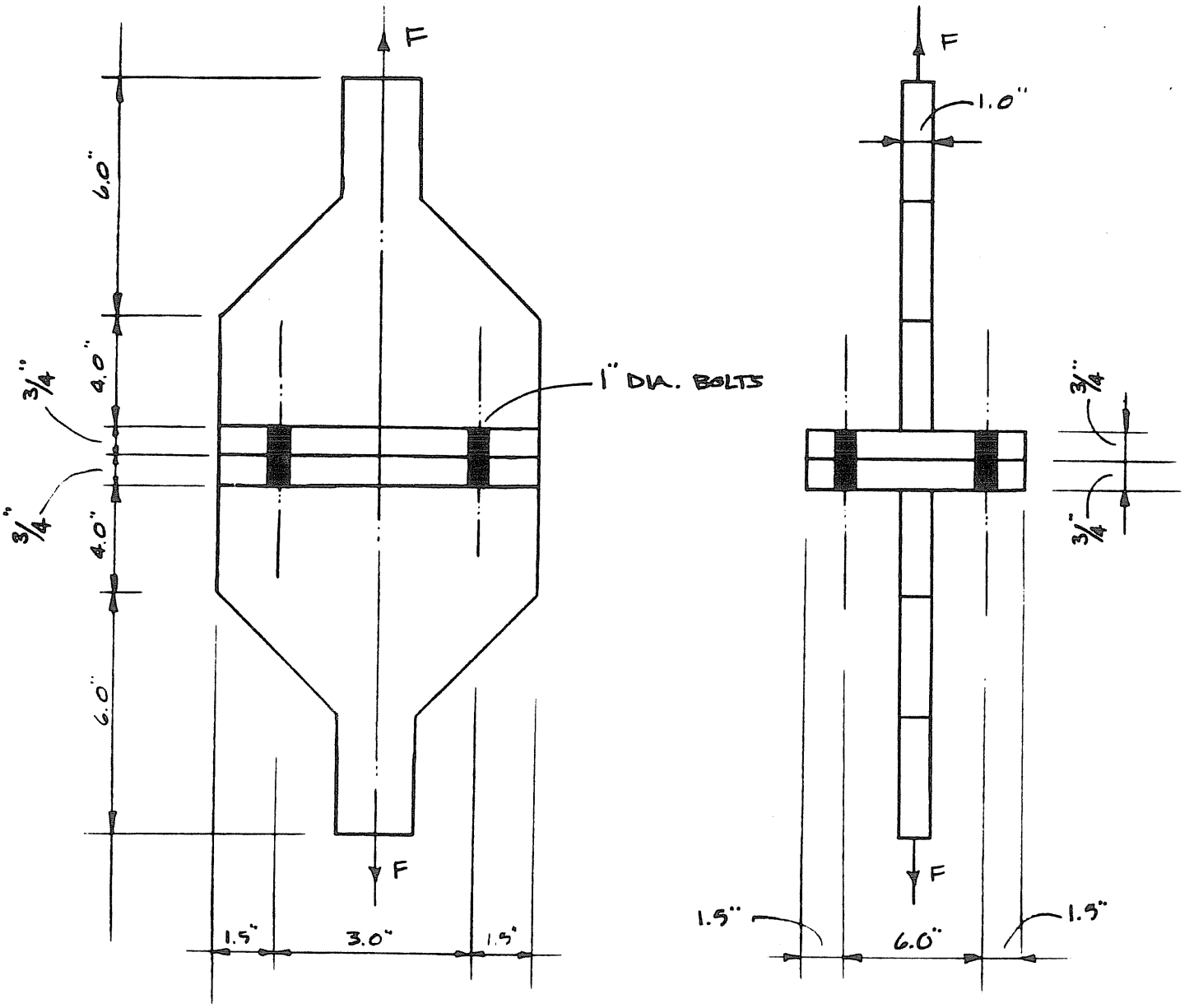

Figure B.31 Specimen Details, Test TH-7

Test TH-7
=========

Given:
---

tf=0.750 in.	(Thickness of flange in tee hanger)
a =1.500 in.	(Distance from bolt center to edge)
b =2.500 in.	(Distance from bolt center to web)
p =3.000 in.	(Width of tee hanger per bolt line)
Fy=36.00 ksi	(Yield stress of tee hanger plate)
Bolt type=A325	(Type of bolt. A325 or A490)
db=1.000 in.	(Diameter of Bolt)
B =69.11 kips.	(Ultimate capacity of bolt)
Fyb=88.00 kips.	(Yield stress of threaded bolt)
Ptb=48.38 kips.	(Pretension force in bolt=0.70 x B)

Solution:

According to the method outlined in Chapter 4 of the AISC Manual, the results are:

Service load capacity = 25.00 kips.
======

Service load capacity times 2.0= 49.99 kips.
======

Predicted failure mode is plate yielding

Predicted bolt force at factored load= 48.38 kips
======

According to the method outlined in THE SPLIT-TEE ANALOGY IN BOLTED SPLICES AND BEAM-COLUMN CONNECTIONS, by Kennedy et al published in Joints in Structural Steelwork, John Wiley & Sons, NY ,1981, pp.2.138-2.157, the results are:

Elastic load capacity = 24.10 kips
======

Ultimate load capacity = 51.39 kips
======

Predicted failure mode is plate yielding

Predicted bolt force at factored load= 48.38 kips
======

Figure B.32 AISC and Kennedy Analyses, Test TH-7

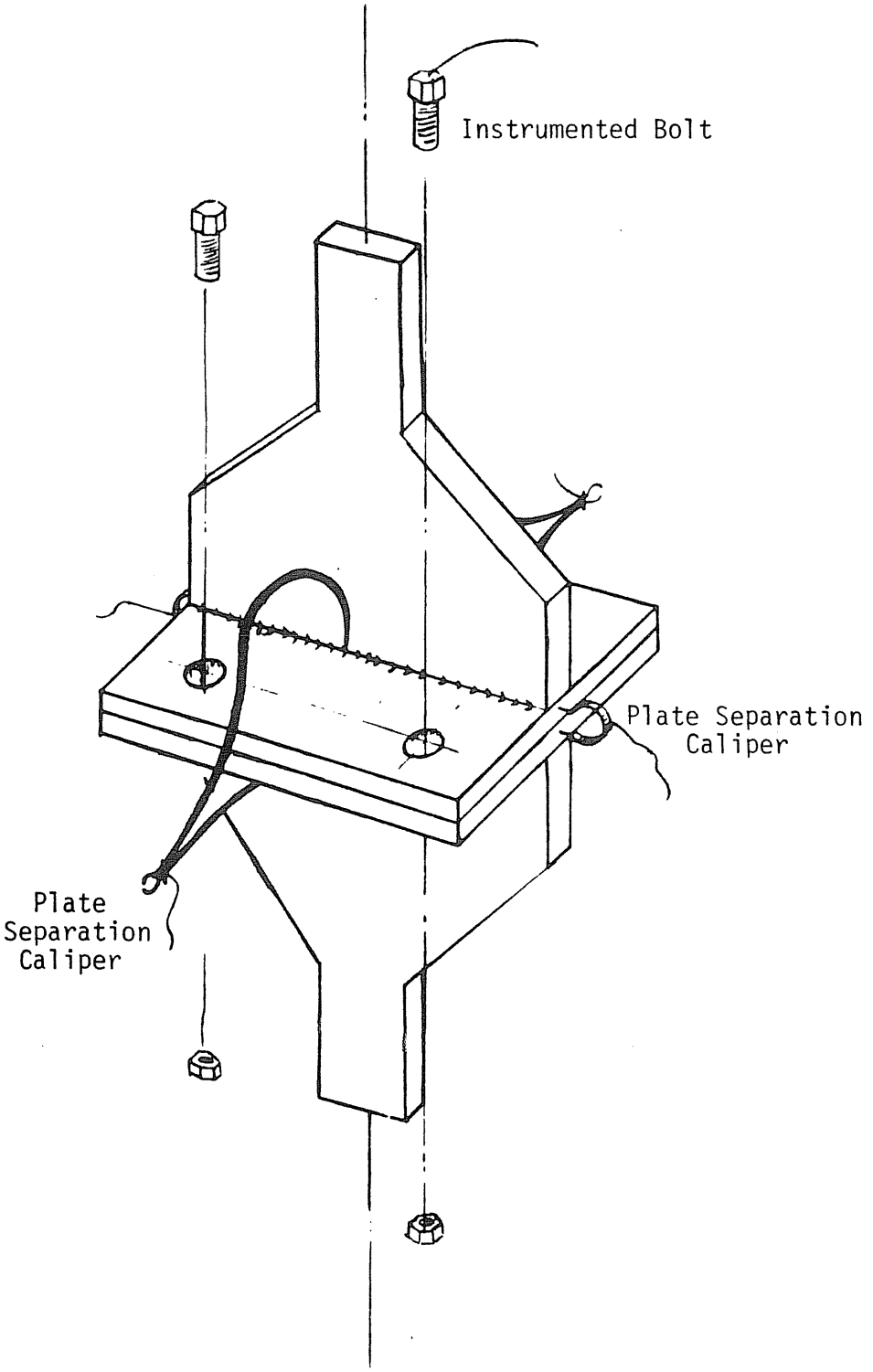

Figure B.33 Instrumentation, Test TH-7

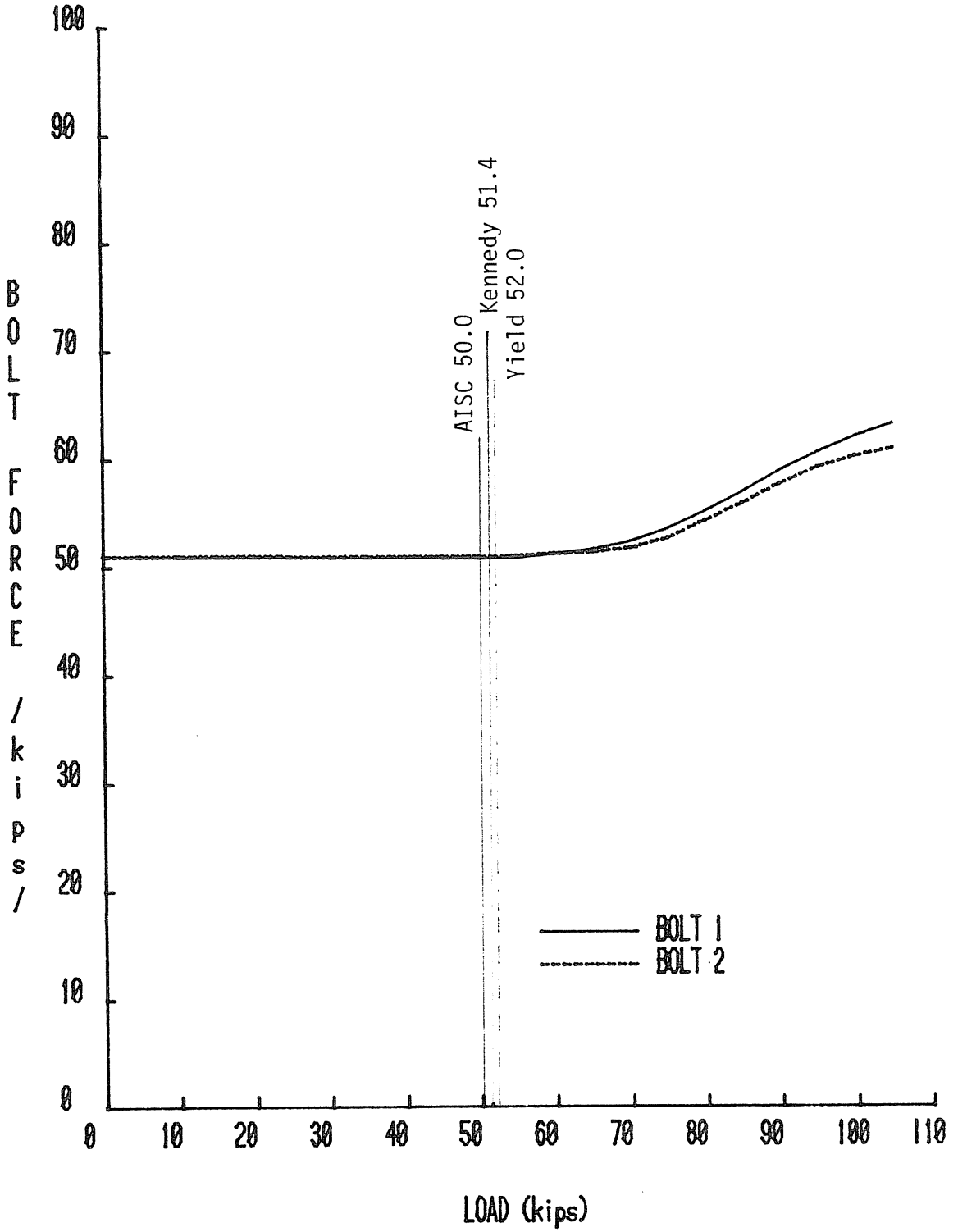

Figure B.34 Load vs. Bolt Force, TH-7

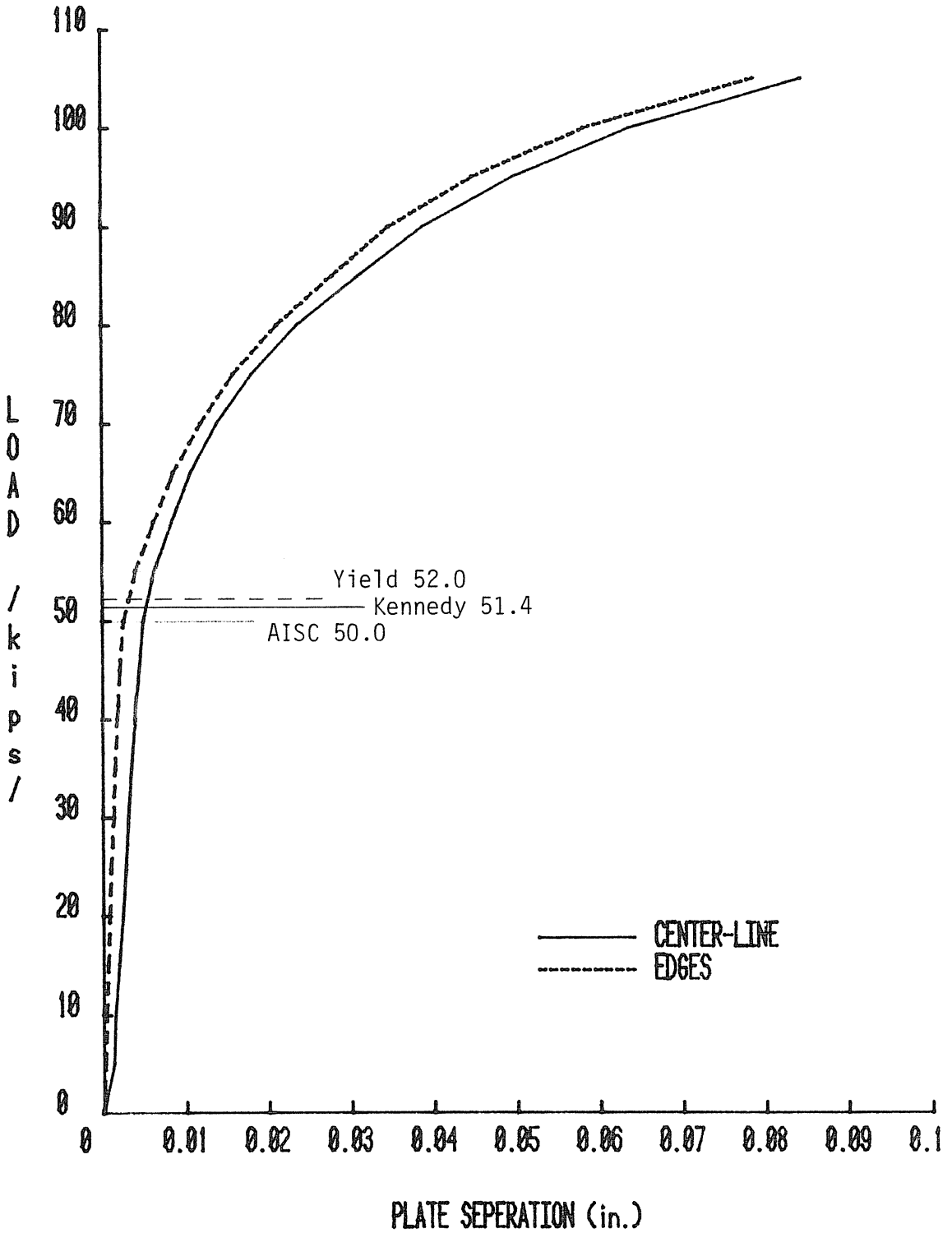

Figure B.35 Load vs. Plate Separation, TH-7

VULCRAFT CONNECTION TEST SUMMARY

Project: VULCRAFT

Test No.: TH-8

Test Date: 2/14/84

Purpose: Verification of AISC design procedure

Number of Tension Bolts: 4 Bolt Gage(g): 4 1/2" Edge Distance: 1 1/2"

Bolt Diameter: 1" Flange Plate Thickness (t): 1"

Plate Width (w): 7 1/2" Plate Length (de): 6"

Web Plate Thickness: 1"

Pretension Force per Bolt: 51 kips

Failure Load, (Total Load): 170 kips

Failure Mode: High bolt forces

Predicted Failure Loads:

Method: AISC (allow. load) Total Tensile Load: 71.0 kips

Method: AISC (1.67) Total Tensile Load: 118.6 kips

Maximum Plate Separation: North 0.0398" Centerline: 0.0369" South: 0.0368"

Load at Which Maximum Plate Separation is Measured: 170 kips

Discussion:

Observations:

-At approximately 130 kips yielding detected on both sides of both webs.

-At 160 kips light was visible through plate separation.

-No yielding was detected in flanges to the maximum applied load.

Loading:

-Maximum applied load was 170 kips.

-Maximum observed bolt force was 76.5 kips, south bolt (2 x AISC allowable = 69.2 kips).

-Maximum applied load was 2.4 times AISC predicted load and 1.4 times AISC load with factor of safety removed.

-Test was stopped due to high bolt forces.

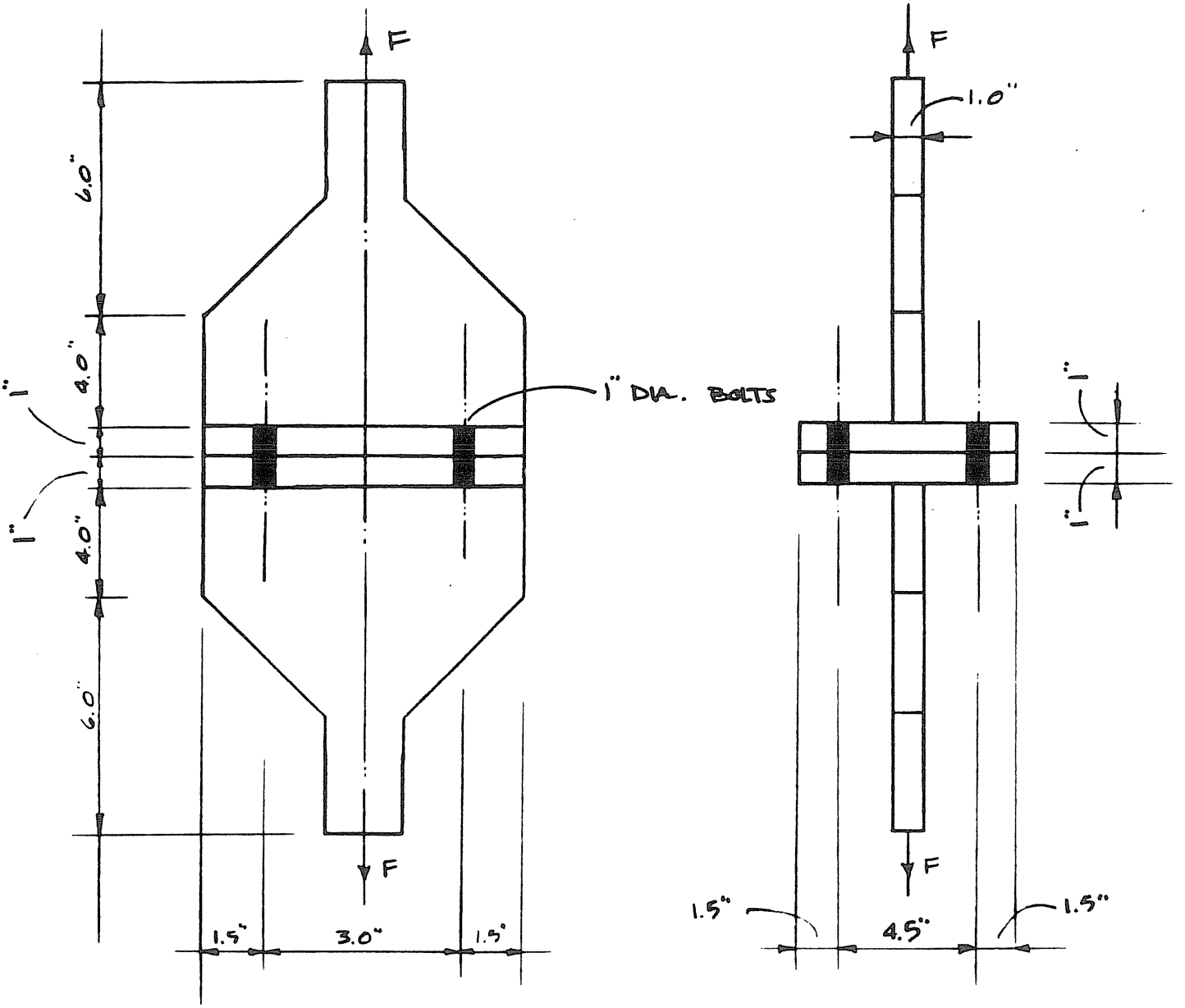

Figure B.36 Specimen Details, Test TH-8

Test TH-8
=========

Given:
---

tf=1.000 in.	(Thickness of flange in tee hanger)
a =1.500 in.	(Distance from bolt center to edge)
b =1.750 in.	(Distance from bolt center to web)
p =3.000 in.	(Width of tee hanger per bolt line)
Fy=36.00 ksi	(Yield stress of tee hanger plate)
Bolt type=A325	(Type of bolt. A325 or A490)
db=1.000 in.	(Diameter of Bolt)
B =69.11 kips.	(Ultimate capacity of bolt)
Fyb=88.00 kips.	(Yield stress of threaded bolt)
Ptb=48.38 kips.	(Pretension force in bolt=0.70 x B)

Solution:

According to the method outlined in Chapter 4 of the AISC Manual, the results are:

Service load capacity = 71.10 kips.
======

Service load capacity times 2.0=142.20 kips.
======

Predicted failure mode is plate yielding

Predicted bolt force at factored load= 48.38 kips
======

According to the method outlined in THE SPLIT-TEE ANALOGY IN BOLTED SPLICES AND BEAM-COLUMN CONNECTIONS, by Kennedy et al published in Joints in Structural Steelwork, John Wiley & Sons, NY ,1981, pp.2.138-2.157, the results are:

Elastic load capacity = 59.91 kips
======

Ultimate load capacity =105.70 kips
======

Predicted failure mode is plate yielding

Predicted bolt force at factored load= 48.38 kips
======

Figure B.37 AISC and Kennedy Analyses, Test TH-8

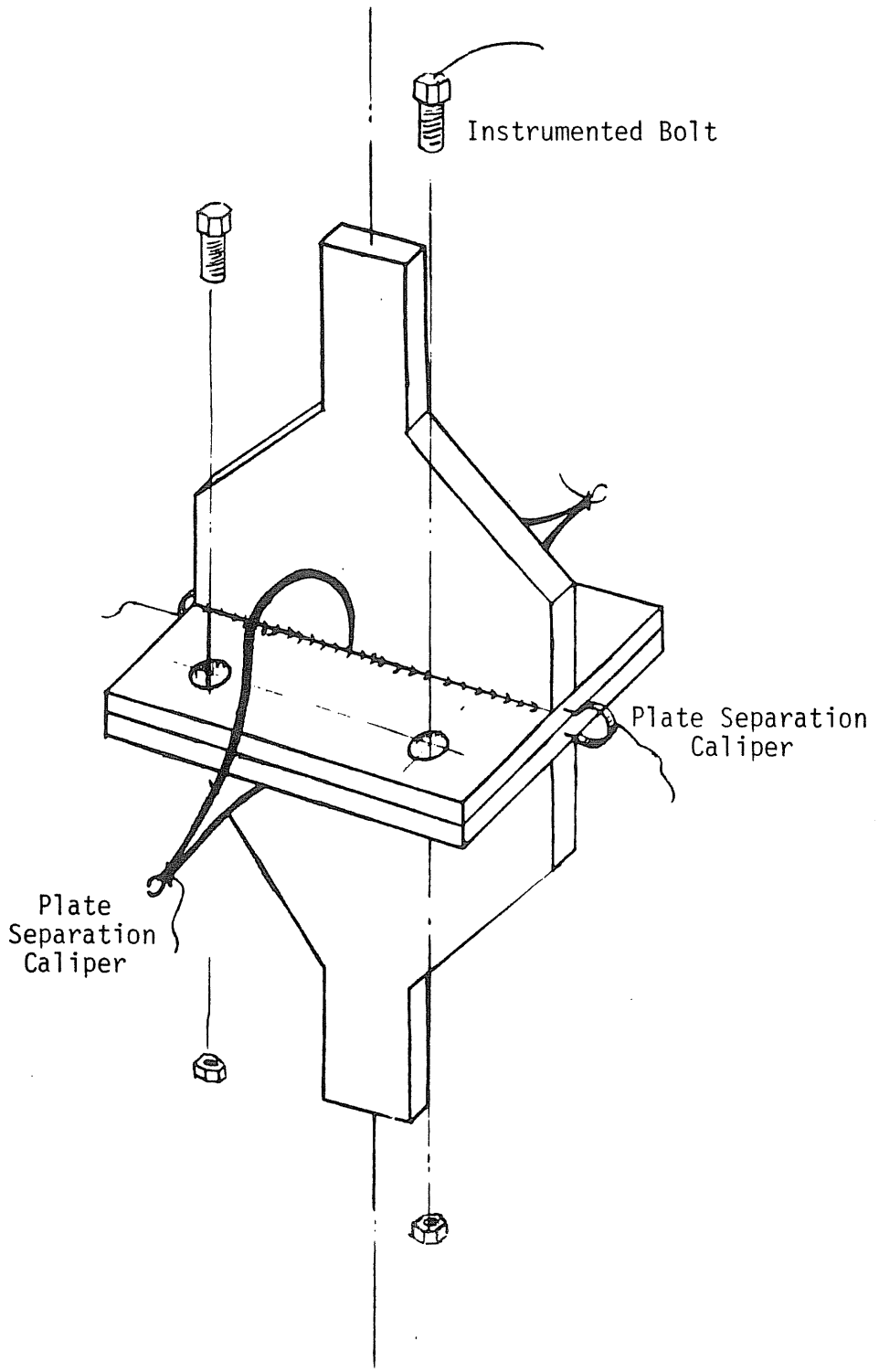

Figure B.38 Instrumentation, Test TH-8

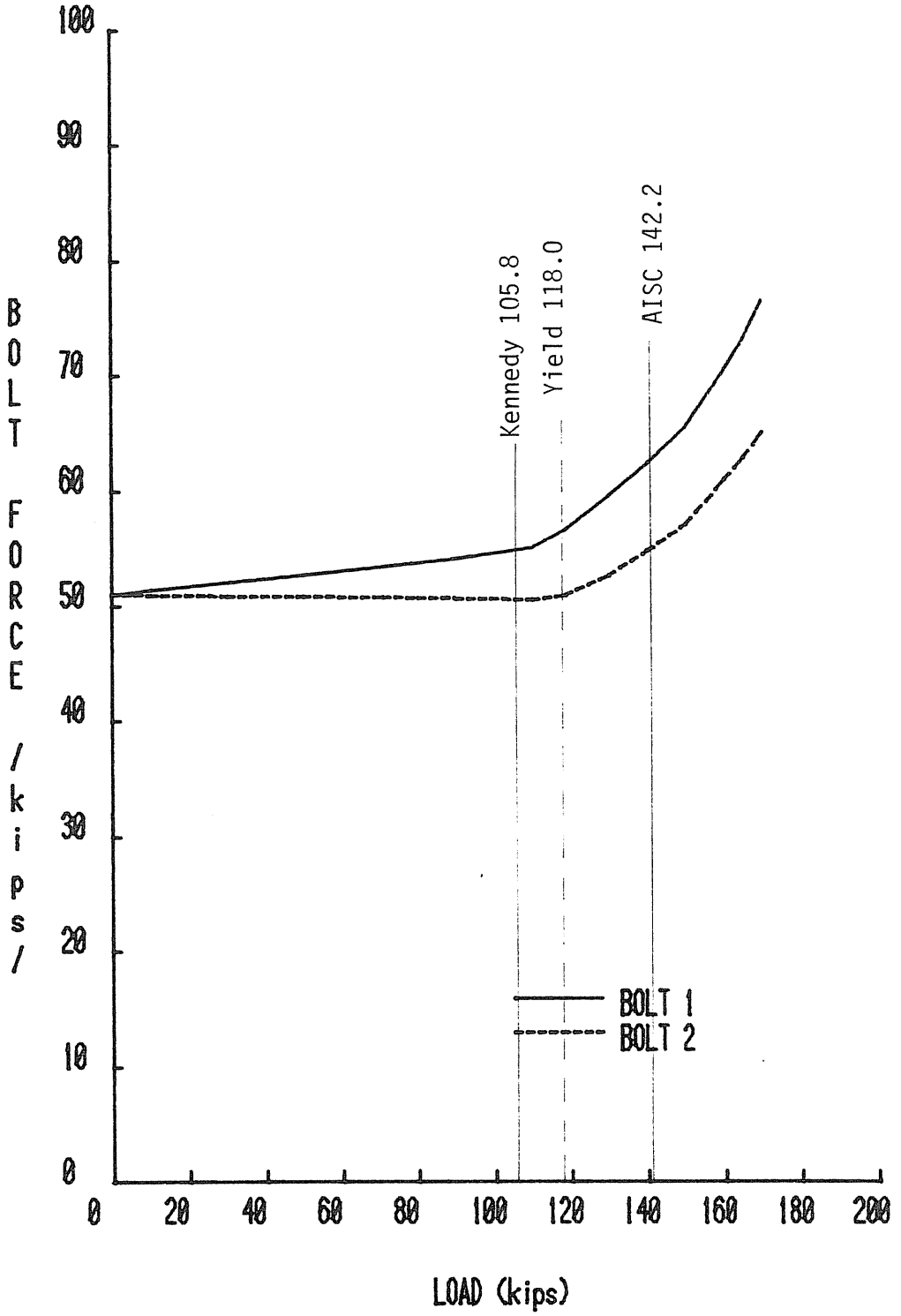

Figure B.39 Load vs. Bolt Force, TH-8

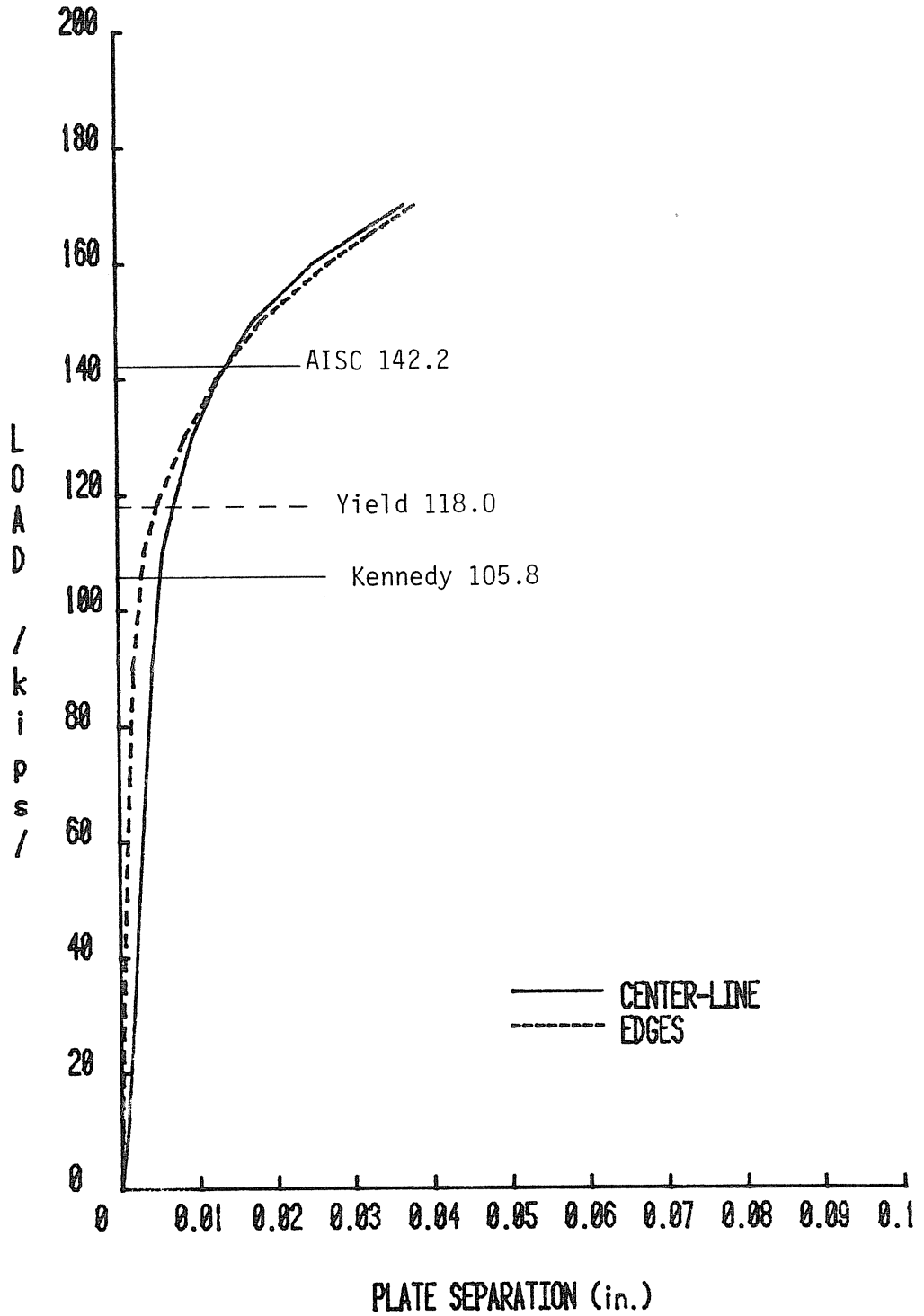

Figure B.40 Load vs. Plate Separation, TH-8

VULCRAFT CONNECTION TEST SUMMARY

Project: VULCRAFT

Test No.: TH-9

Test Date: 2/13/84

Purpose: Verification of AISC design procedure

Number of Tension Bolts: 4 **Bolt Gage(g):** 6" **Edge Distance:** 1 1/2"

Bolt Diameter: 1" **Flange Plate Thickness (t):** 1"

Plate Width (w): 9" **Plate Length (de):** 6"

Web Plate Thickness: 1"

Pretension Force per Bolt: 51 kips

Failure Load, (Total Load): 151.2 kips

Failure Mode: High bolt forces

Predicted Failure Loads:

Method: AISC (allow. load) **Total Tensile Load:** 44.44 kips

Method: AISC (1.67) **Total Tensile Load:** 74.21 kips

Maximum Plate Separation: North 0.0938" Centerline: 0.0794" South: 0.0781"

Load at Which Maximum Plate Separation is Measured: 150 kips

Discussion:

Observations:

-At approximately 137 kips light was visible through plate separation.

-At 140 kips (or before) yielding of web was detected.

-At 150 kips one bolt force became very high, and a yield line was detected in the bottom west bolt line.

Loading:

-Maximum applied load was 151.2 kips.

-Maximum bolt force was 82 kips, south bolt (2 x AISC allowable = 69.2 kips).

-Maximum applied load was 3.4 times AISC predicted load and 2.04 times AISC load with factor of safety removed.

-Test was stopped due to high bolt forces.

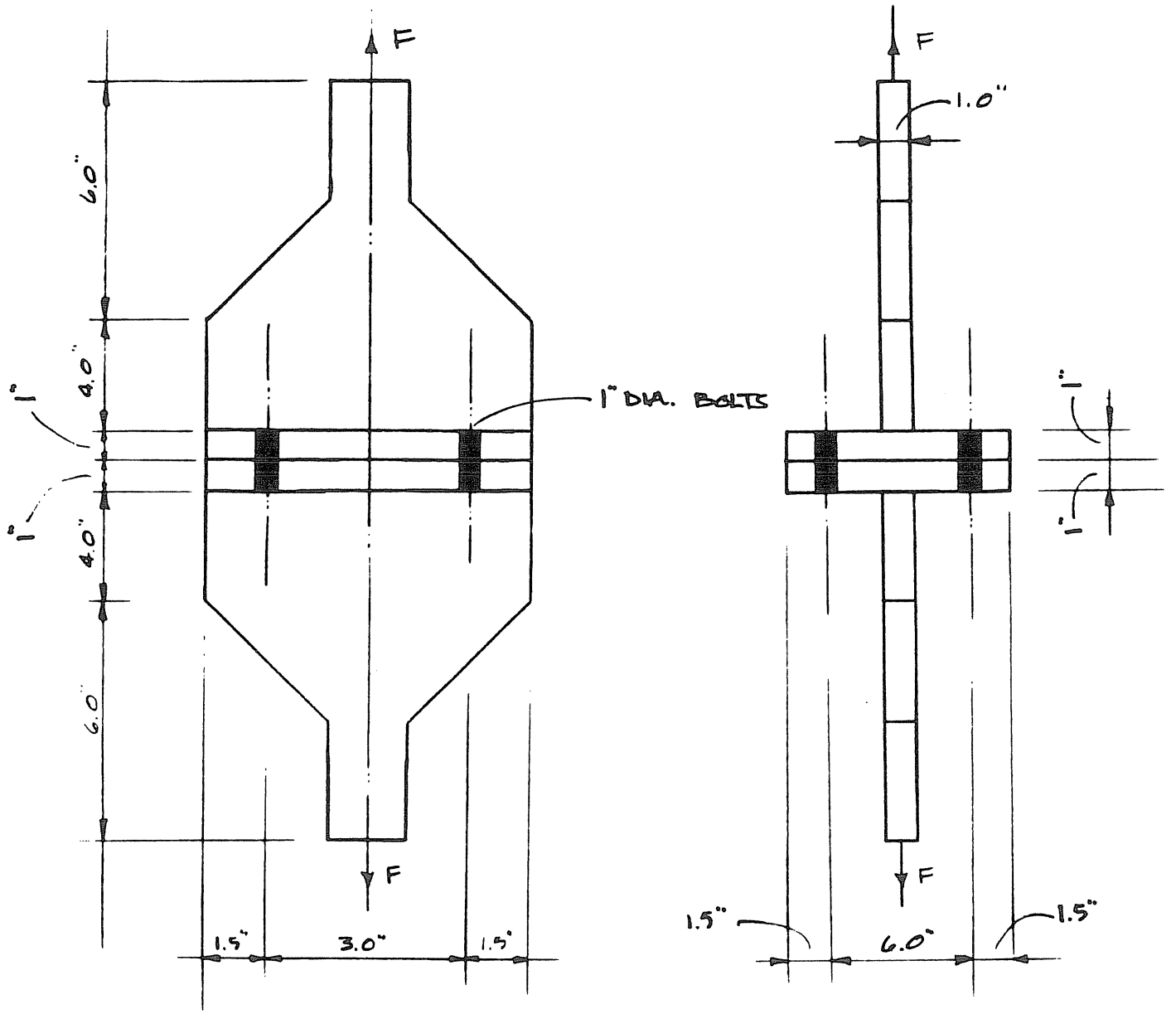

Figure B.41 Specimen Details, Test TH-9

Test TH-9
=========

Given:
---

tf=1.000 in.	(Thickness of flange in tee hanger)
a =1.500 in.	(Distance from bolt center to edge)
b =2.500 in.	(Distance from bolt center to web)
p =3.000 in.	(Width of tee hanger per bolt line)
Fy=36.00 ksi	(Yield stress of tee hanger plate)
Bolt type=A325	(Type of bolt. A325 or A490)
db=1.000 in.	(Diameter of Bolt)
B =69.11 kips.	(Ultimate capacity of bolt)
Fyb=88.00 kips.	(Yield stress of threaded bolt)
Ptb=48.38 kips.	(Pretension force in bolt=0.70 x B)

Solution:

According to the method outlined in Chapter 4 of the AISC Manual, the results are:

Service load capacity = 44.44 kips.
======

Service load capacity times 2.0= 88.88 kips.
======

Predicted failure mode is plate yielding

Predicted bolt force at factored load= 48.38 kips
======

According to the method outlined in THE SPLIT-TEE ANALOGY IN BOLTED SPLICES AND BEAM-COLUMN CONNECTIONS, by Kennedy et al published in Joints in Structural Steelwork, John Wiley & Sons, NY ,1981, pp.2.138-2.157, the results are:

Elastic load capacity = 42.57 kips
======

Ultimate load capacity = 79.12 kips
======

Predicted failure mode is plate yielding

Predicted bolt force at factored load= 48.38 kips
======

Figure B.42 AISC and Kennedy Analyses, Test TH-9

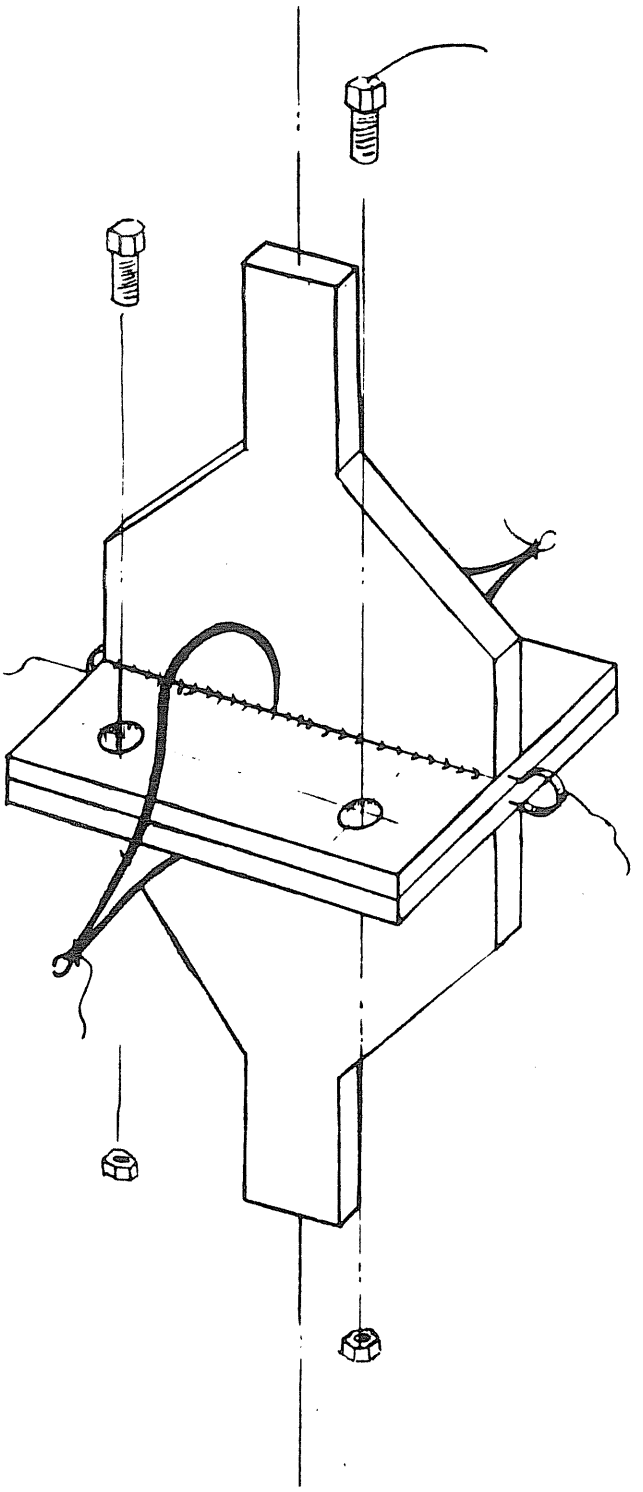

Figure B.43 Instrumentation, Test TH-9

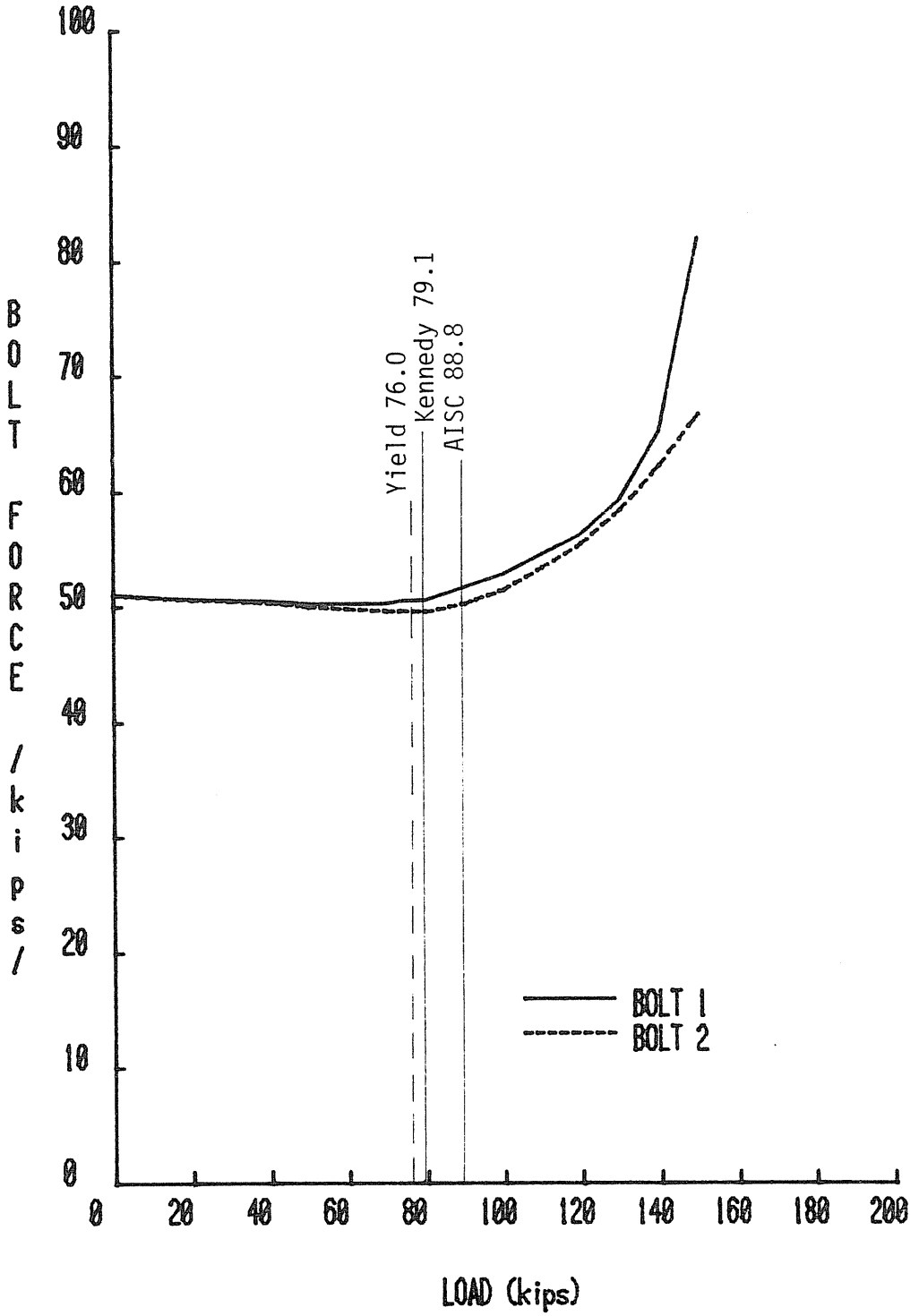

Figure B.44 Load vs. Bolt Force, TH-9

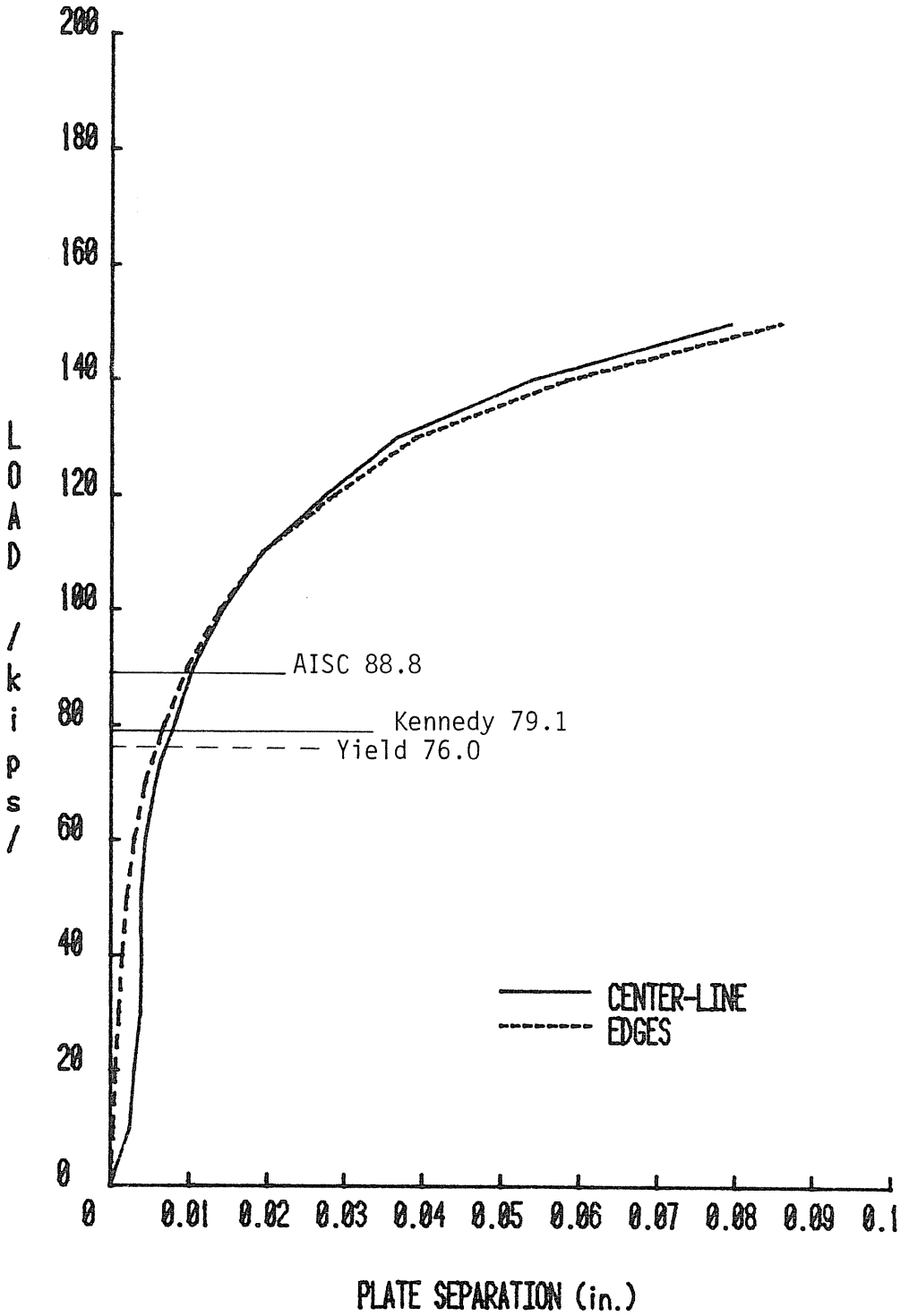

Figure B.45 Load vs. Plate Separation, TH-9

APPENDIX C

KNEE CONNECTION TEST DATA

(CN TESTS)

VULCRAFT CONNECTION TEST SUMMARY

Project: VULCRAFT

Test No.: CN-1 (corresponding to TH-2) Note: F_y of plate differs

Test Date: 2/15/84

Purpose: Verification of AISC design procedure

Number of Tension Bolts: 4 **Bolt Gage(g):** 3 1/4" **Edge Distance:** 1 1/2"

Bolt Diameter: 5/8" **Flange Plate Thickness (t):** 1/2"

Plate Width (w): 6 1/4" **Plate Length (LL):** 23"

Web Plate Thickness: 1"

Pretension Force per Bolt: 19 kips

Failure Load, (Total Load): 95.4 kips

Failure Mode: Weld tear-out

Predicted Failure Loads:

Method: AISC (allow. load) **Total Tensile Load:** 40.87 kips

Method: AISC (1.67) **Total Tensile Load:** 68.25 kips

Maximum Plate Separation: East 0.0006" Centerline 0.0195"

Load at Which Maximum Plate Separation is Measured: 90 kips

Discussion:

Observations:

-At start of test speciman was out of alignment due to fabrication.

-At 40 kips localized yielding was detected around the south bottom bolts of the tension connection end.

-At 62.8 kips yielding was detected on the bottom south angle at back of spacer angle weld.

-At 70 kips additional yielding was detected around the south bottom bolts of the tension connection end.

-At 75 kips yielding of the upper stem plate was detected.

-At 85 kips connection appeared to have been straightened by load.

-At 95.4 kips weld failed, yielding was then detected around the north west bolt of the connection end, and around the far end, south east bolt.

Loading:

-Maximum applied load was 95.4 kips.

-Maximum observed bolt force was 28.1 kips, north bolt (2 x AISC allowable = 27.0 kips).

-Maximum applied load was 3.2 times AISC predicted load and 1.9 times the AISC load with safety factor removed.

-Rupture of web-to-flange weld occured suddenly at 90 kips.

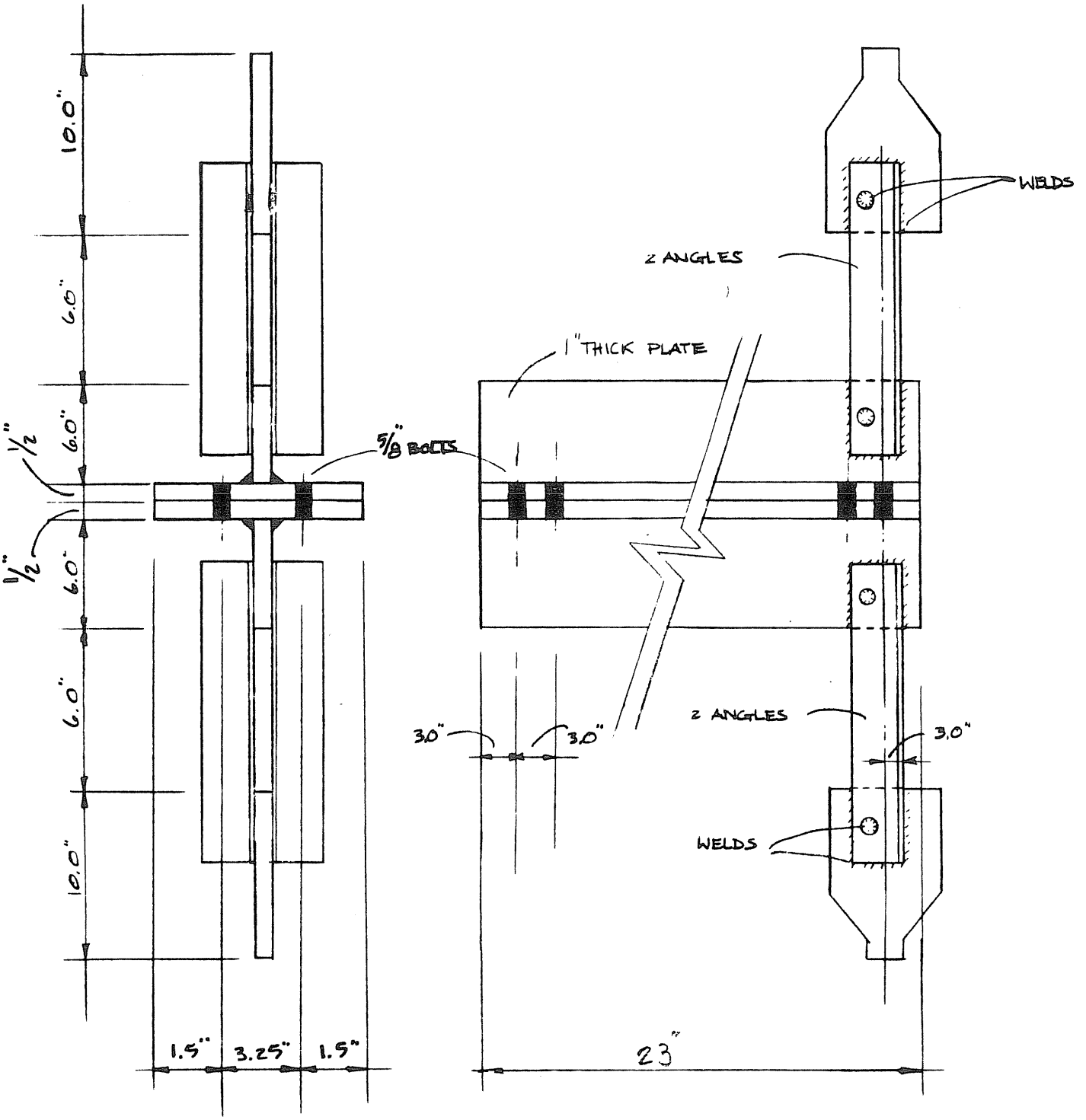

Figure C.1 Specimen Details, Test CN-1

Test CN-1
==========

Given:
---

tf=0.500 in.	(Thickness of flange in tee hanger)
a =1.500 in.	(Distance from bolt center to edge)
b =1.125 in.	(Distance from bolt center to web)
p =3.000 in.	(Width of tee hanger per bolt line)
Fy=50.00 ksi	(Yield stress of tee hanger plate)
Bolt type=A325	(Type of bolt. A325 or A490)
db=0.625 in.	(Diameter of Bolt)
B =27.00 kips.	(Ultimate capacity of bolt)
Fyb=88.00 kips.	(Yield stress of threaded bolt)
Ptb=18.90 kips.	(Pretension force in bolt=0.70 x B)

Solution:

According to the method outlined in Chapter 4 of the AISC Manual, the results are:

Service load capacity = 40.87 kips.
======

Service load capacity times 2.0= 81.73 kips.
======

Predicted failure mode is plate yielding

Predicted bolt force at factored load= 24.42 kips
======

According to the method outlined in THE SPLIT-TEE ANALOGY IN BOLTED SPLICES AND BEAM-COLUMN CONNECTIONS, by Kennedy et al published in Joints in Structural Steelwork, John Wiley & Sons, NY ,1981, pp.2.138-2.157, the results are:

Elastic load capacity = 32.73 kips
======

Ultimate load capacity = 61.50 kips
======

Predicted failure mode is plate yielding

Predicted bolt force at factored load= 19.65 kips
======

Figure C.2 AISC and Kennedy Analyses, Test CN-1

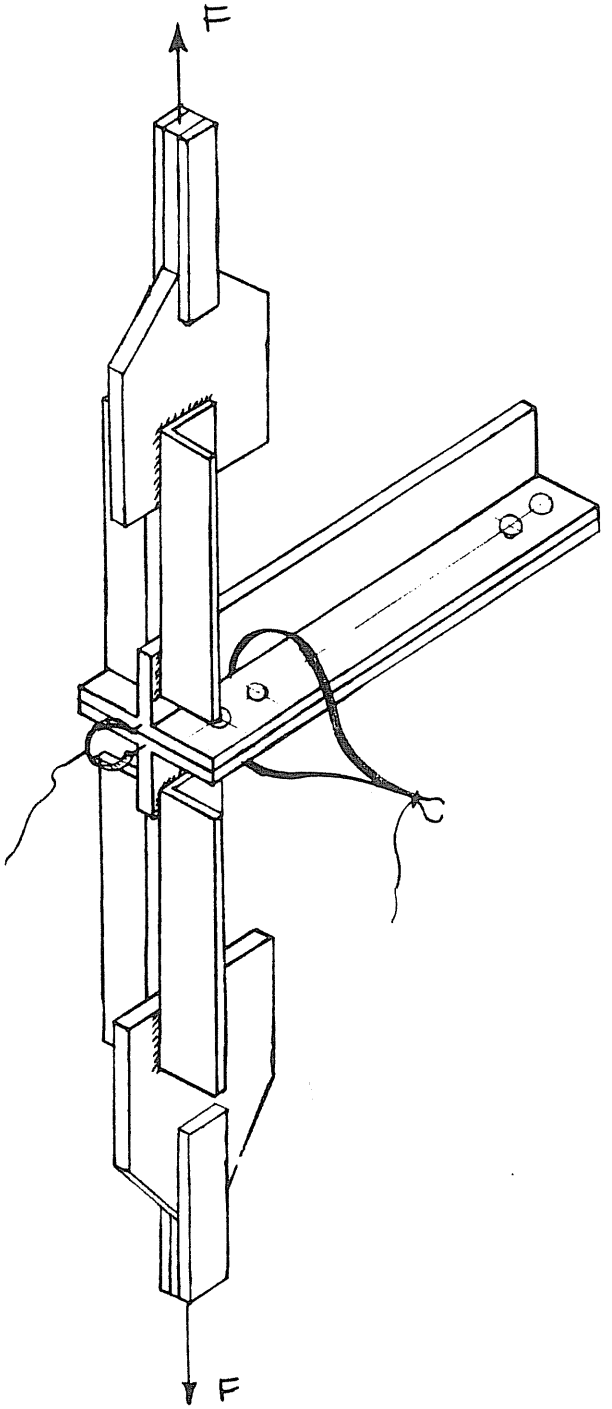

Figure C.3 Instrumentation, Test CN-1

USE A-36 MAT'L
FOR ALL PLATES

NOTES

1. STACK DRILL HORIZ. PL'S
2. HOLD ALL TOLERANCES
3. CENTROID OF Δ'S TO LINE UP W/ CENTER OF HOLES AND CENTER OF PL1
4. 18" LONG BLANK REQ'D FOR EACH HAUNCH (FROM SAME STEEL) HORIZ. PL.
5. DO NOT WELD MORE THAN SHOWN
6. DO NOT PAINT OR MARK ANY MAT'L.

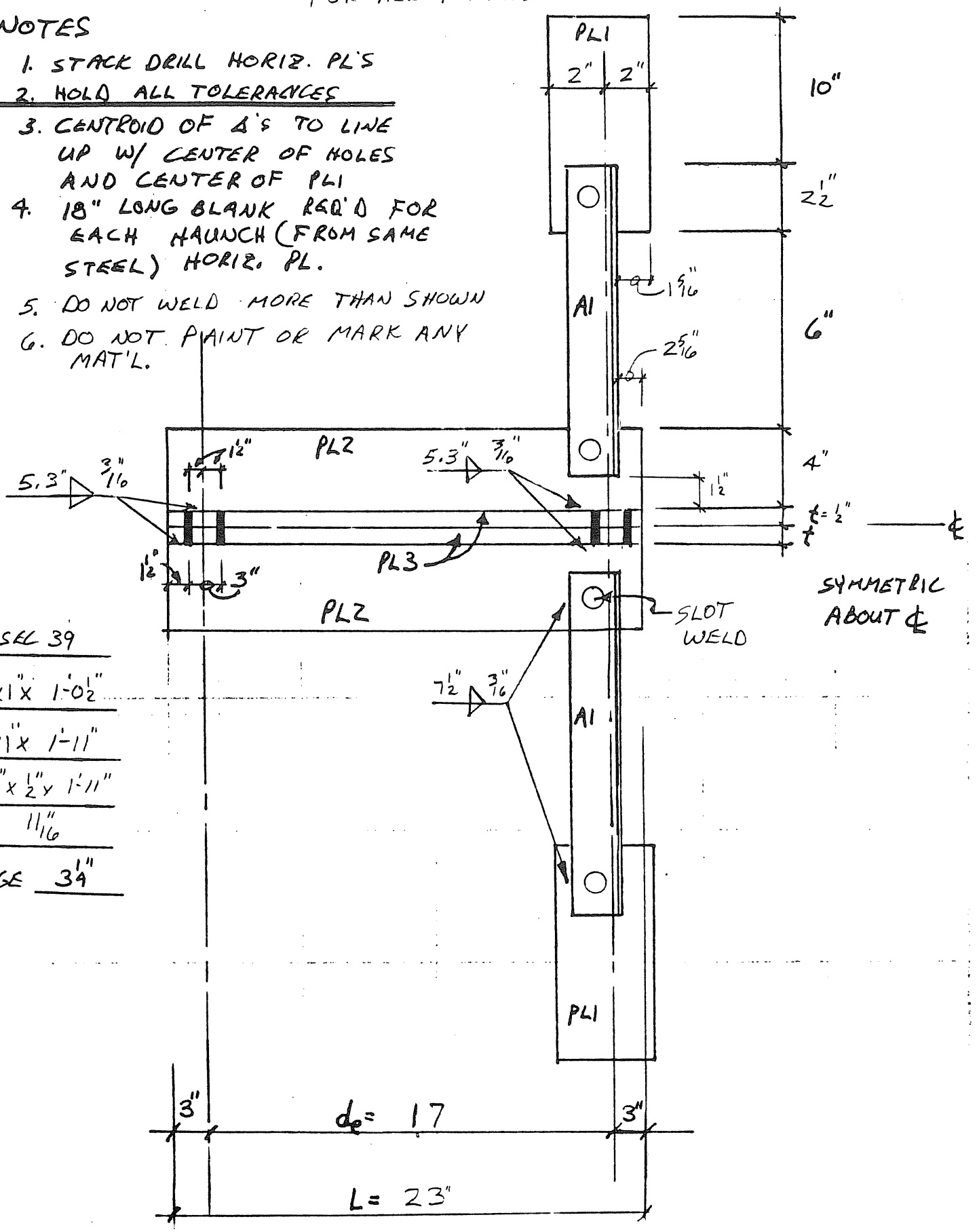

A1 2-SEC 39

PL1 4"x1"x 1'-0½"

PL2 4"x1"x 1'-11"

PL3 6¼"x ½"x 1'-11"

HOLE Ø 11/16"

HOLE GAGE 3¼"

Figure C.4 Shop Details, Test CN-1

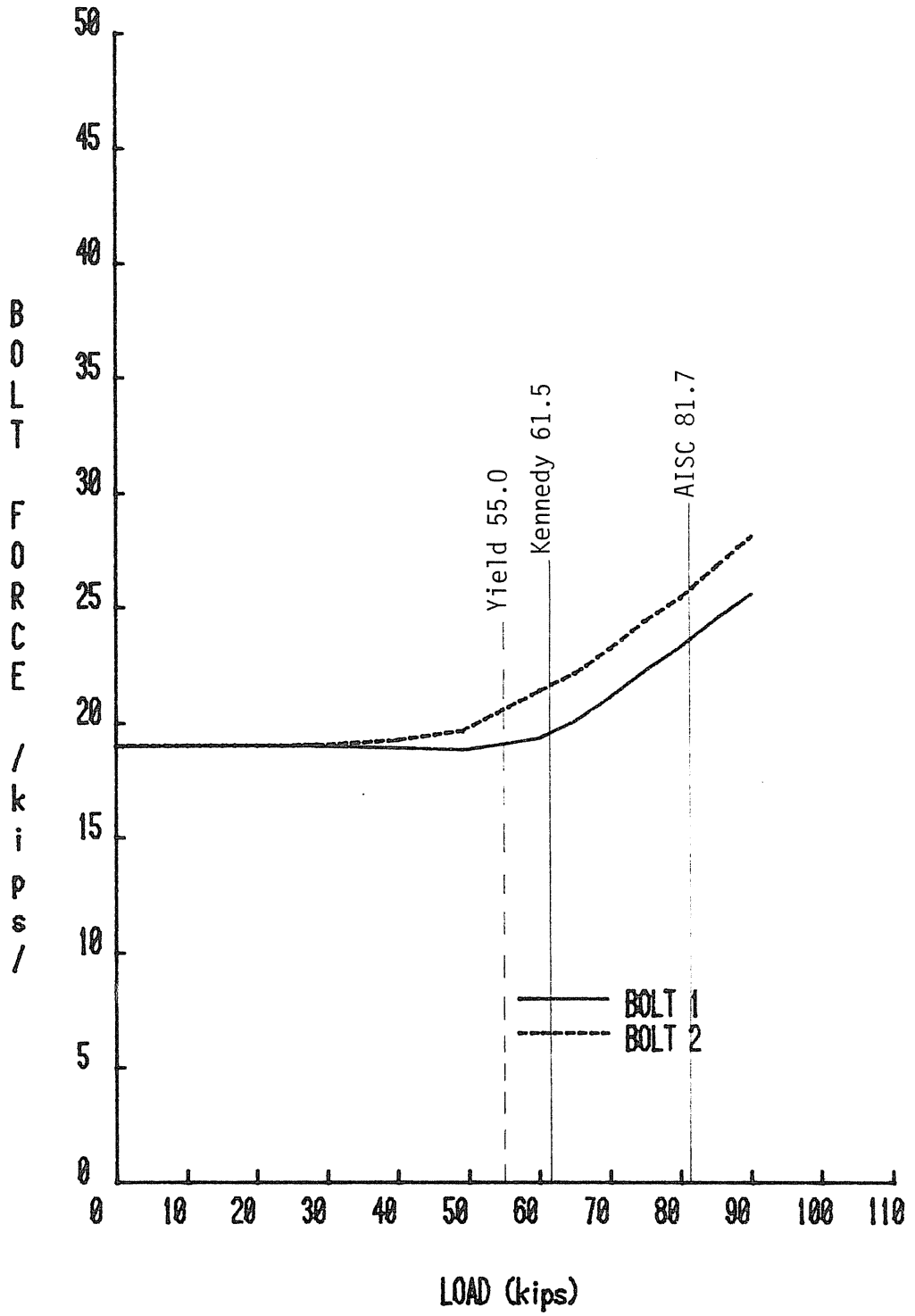

Figure C.5 Load vs. Bolt Force, CN-1

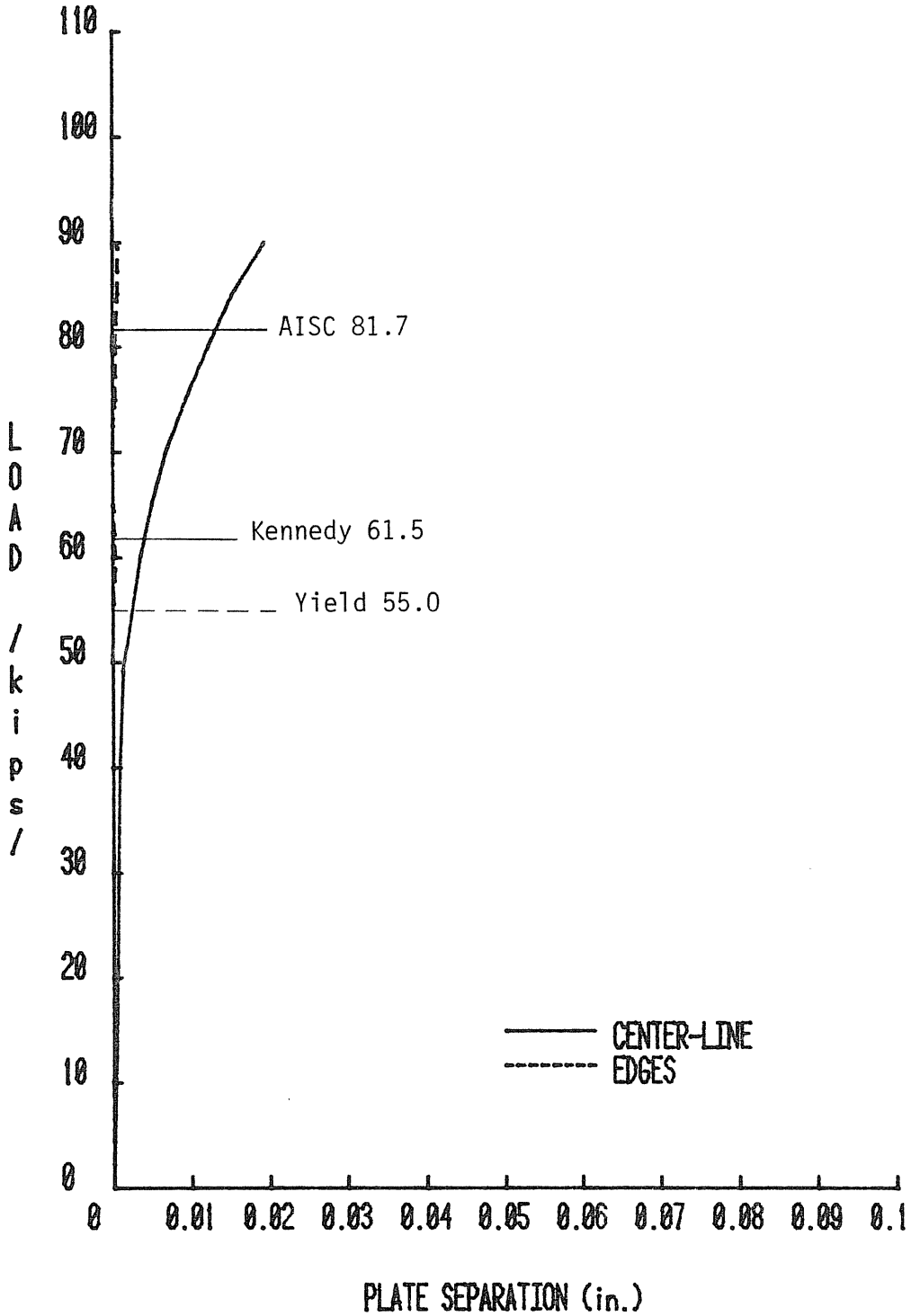

Figure C.6 Load vs. Plate Separation, CN-1

VULCRAFT CONNECTION TEST SUMMARY

Project: VULCRAFT

Test No.: CN-1A (Retest of CN-1 after rewelding web-to-flange.)

Test Date: 2/23/84

Purpose: Verification of AISC design procedure

Number of Tension Bolts: 4 **Bolt Gage(g):** 3 1/4" **Edge Distance:** 1 1/2"

Bolt Diameter: 5/8" **Flange Plate Thickness (t):** 1/2"

Plate Width (w): 6 1/4" **Plate Length (LL):** 23"

Web Plate Thickness: 1"

Pretension Force per Bolt: 19 kips

Failure Load, (Total Load): 119.3 kips

Failure Mode: Rupture of bolts

Predicted Failure Loads:

Method: AISC (allow. load) **Total Tensile Load:** 40.87 kips

Method: AISC (1.67) **Total Tensile Load:** 68.25 kips

Maximum Plate Separation: East: 0.0256" Centerline: 0.0231"

Load at Which Maximum Plate Separation is Measured: 100 kips

Discussion:

Observations:

-At 91 kips small yielding of angles near welds was detected.

-At 100 kips displacement transducers (calipers) were removed due to high bolt forces (33.3 kips).

-At 104 kips yielding of angles near welds was more extensive.

-At 115 kips plate separation appeared to be approximately 3/16 in.

-At 118.6 kips there was extensive yielding of the bottom angles in the mid-section, especially in the north angle. Some yielding of the top north angle was also detected.

-At 119.3 kips 3 of the 4 tension bolts ruptured (both north and the south east), two of them being the instrumented bolts.

-After all load was released there appeared to be approximately 1/8" of permanent plate separation.

Loading:

-Maximum applied load was 119.3 kips.

-Maximum observed bolt force was 43.3 kips at 115 kips load, west north bolt (2 x AISC allowable = 27 kips)

-Maximum applied load was 4.9 times AISC predicted load and 2.9 times AISC load with factor of safety removed.

-Sudden rupture of bolts occured at 119.3 kips.

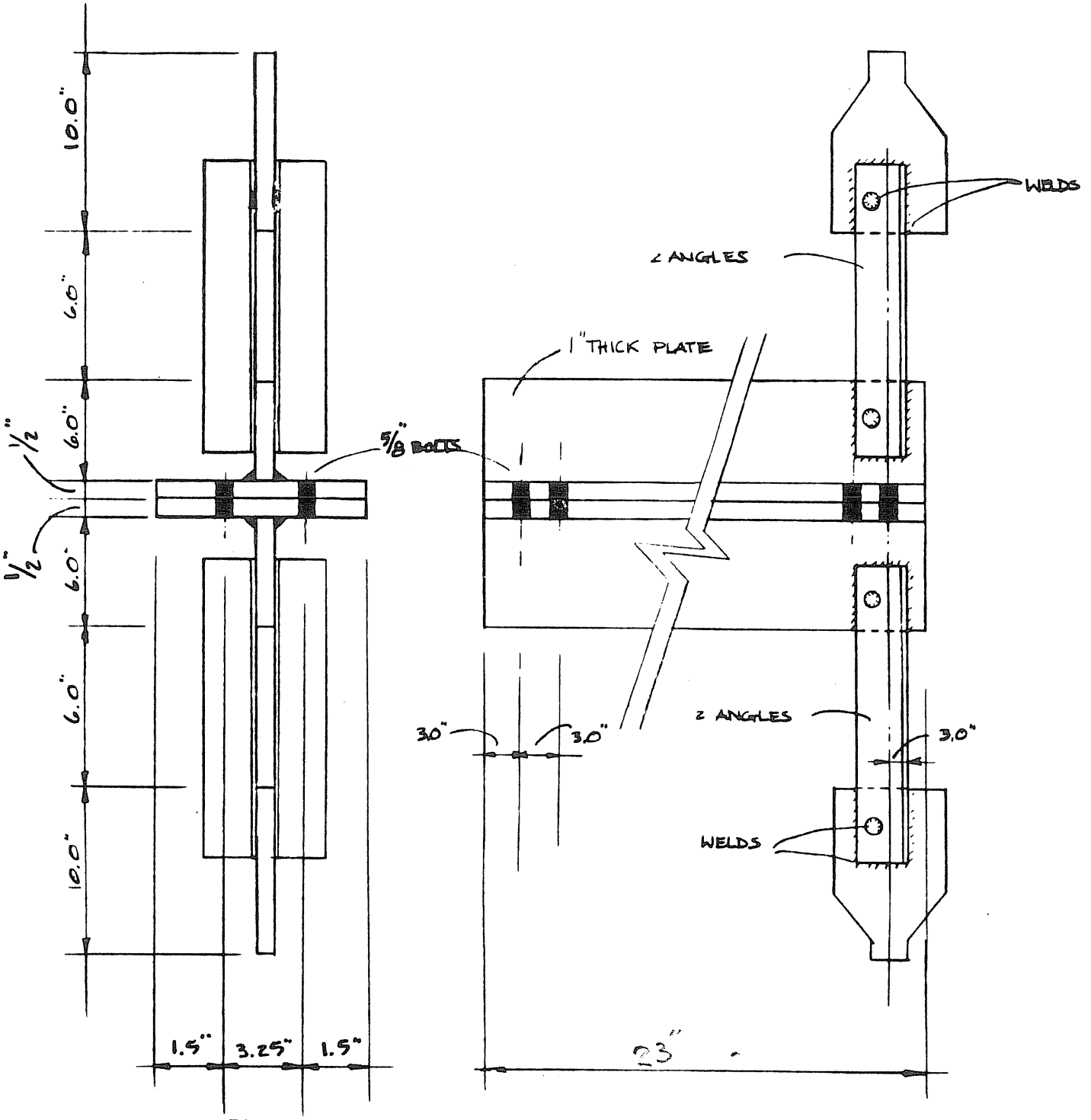

Figure C.7 Specimen Details, Test CN-1A

Test CN-1A
==========

Given:
---

tf=0.500 in.	(Thickness of flange in tee hanger)
a =1.500 in.	(Distance from bolt center to edge)
b =1.125 in.	(Distance from bolt center to web)
p =3.000 in.	(Width of tee hanger per bolt line)
Fy=50.00 ksi	(Yield stress of tee hanger plate)
Bolt type=A325	(Type of bolt. A325 or A490)
db=0.625 in.	(Diameter of Bolt)
B =27.00 kips.	(Ultimate capacity of bolt)
Fyb=88.00 kips.	(Yield stress of threaded bolt)
Ptb=18.90 kips.	(Pretension force in bolt=0.70 x B)

Solution:

According to the method outlined in Chapter 4 of the AISC Manual, the results are:

Service load capacity = 40.87 kips.
======

Service load capacity times 2.0= 81.73 kips.
======

Predicted failure mode is plate yielding

Predicted bolt force at factored load= 24.42 kips
======

According to the method outlined in THE SPLIT-TEE ANALOGY IN BOLTED SPLICES AND BEAM-COLUMN CONNECTIONS, by Kennedy et al published in Joints in Structural Steelwork, John Wiley & Sons, NY ,1981, pp.2.138-2.157, the results are:

Elastic load capacity = 32.73 kips
======

Ultimate load capacity = 61.50 kips
======

Predicted failure mode is plate yielding

Predicted bolt force at factored load= 19.65 kips
======

Figure C.8 AISC and Kennedy Analyses, Test CN-1A

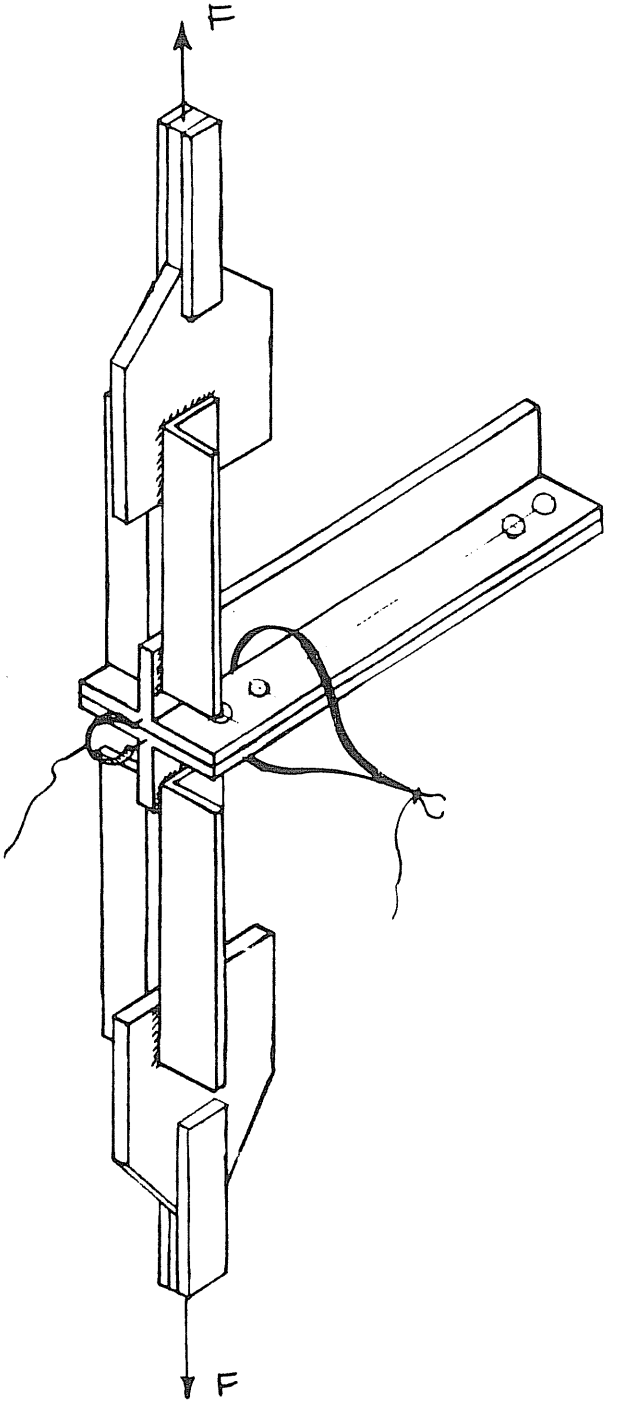

Figure C.9 Instrumentation, Test CN-1A

USE A-36 MAT'L
FOR ALL PLATES

NOTES

1. STACK DRILL HORIZ. PL'S
2. HOLD ALL TOLERANCES
3. CENTROID OF Δ'S TO LINE UP W/ CENTER OF HOLES AND CENTER OF PL1
4. 18" LONG BLANK REQ'D FOR EACH HAUNCH (FROM SAME STEEL) HORIZ. PL.
5. DO NOT WELD MORE THAN SHOWN
6. DO NOT PAINT OR MARK ANY MAT'L.

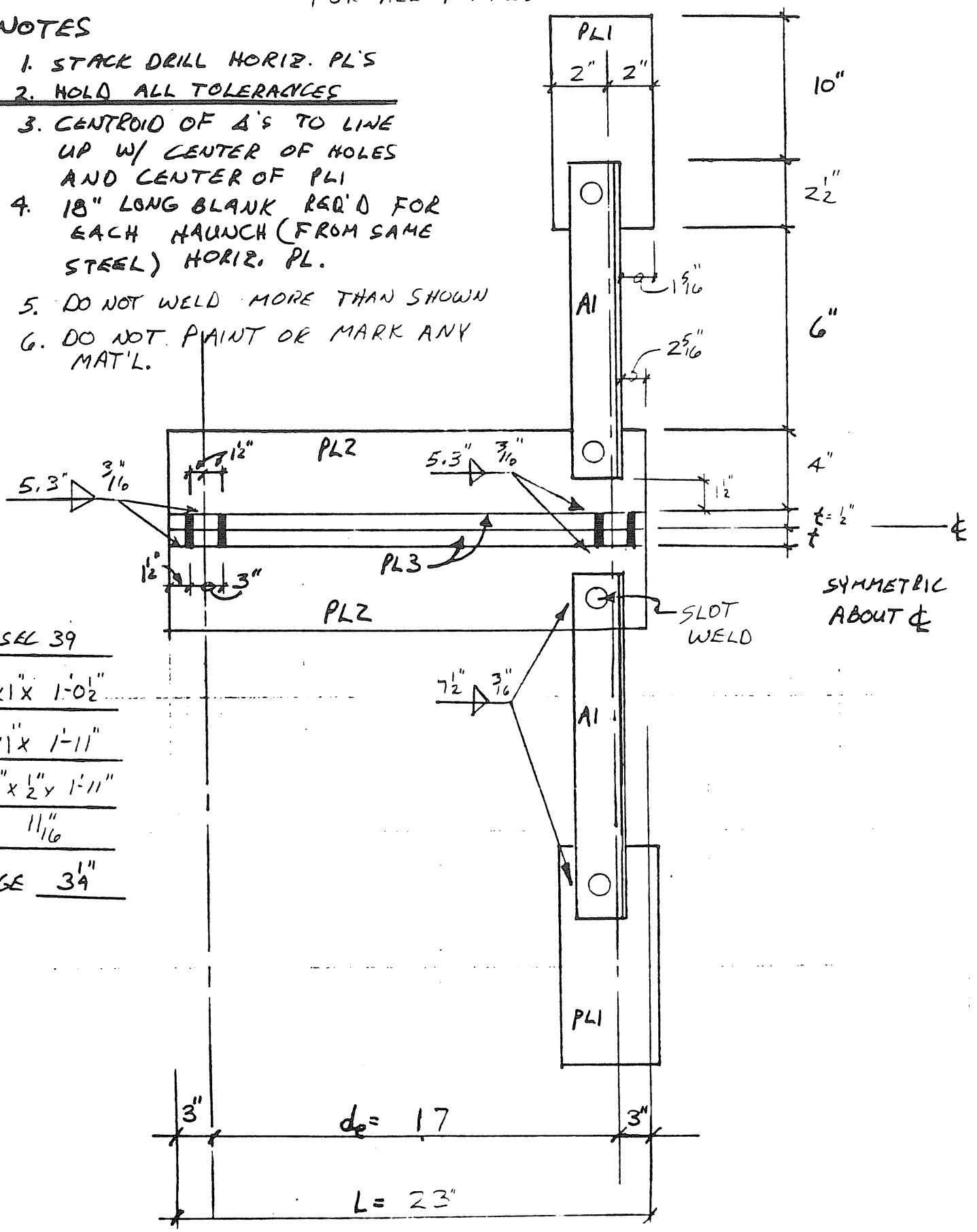

A1 2-SEC 39

PL1 4"x1"x 1'-0 1/2"

PL2 4"x1"x 1'-11"

PL3 6 1/4"x 1/2"x 1'-11"

HOLE Ø 11/16"

HOLE GAGE 3 1/4"

Figure C.10 Shop Details, Test CN-1A

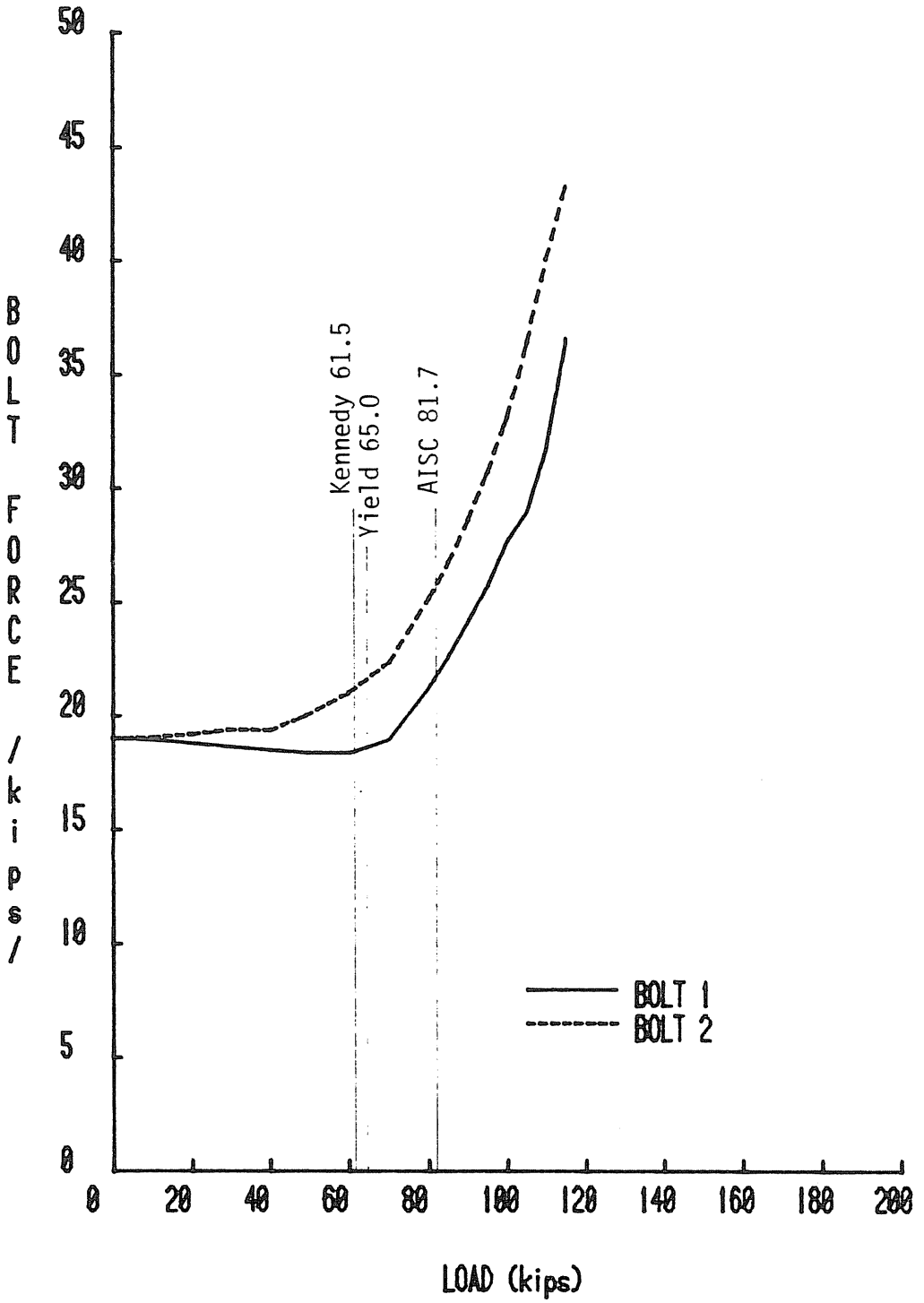

Figure C.11 Load vs. Bolt Force, CN-1A

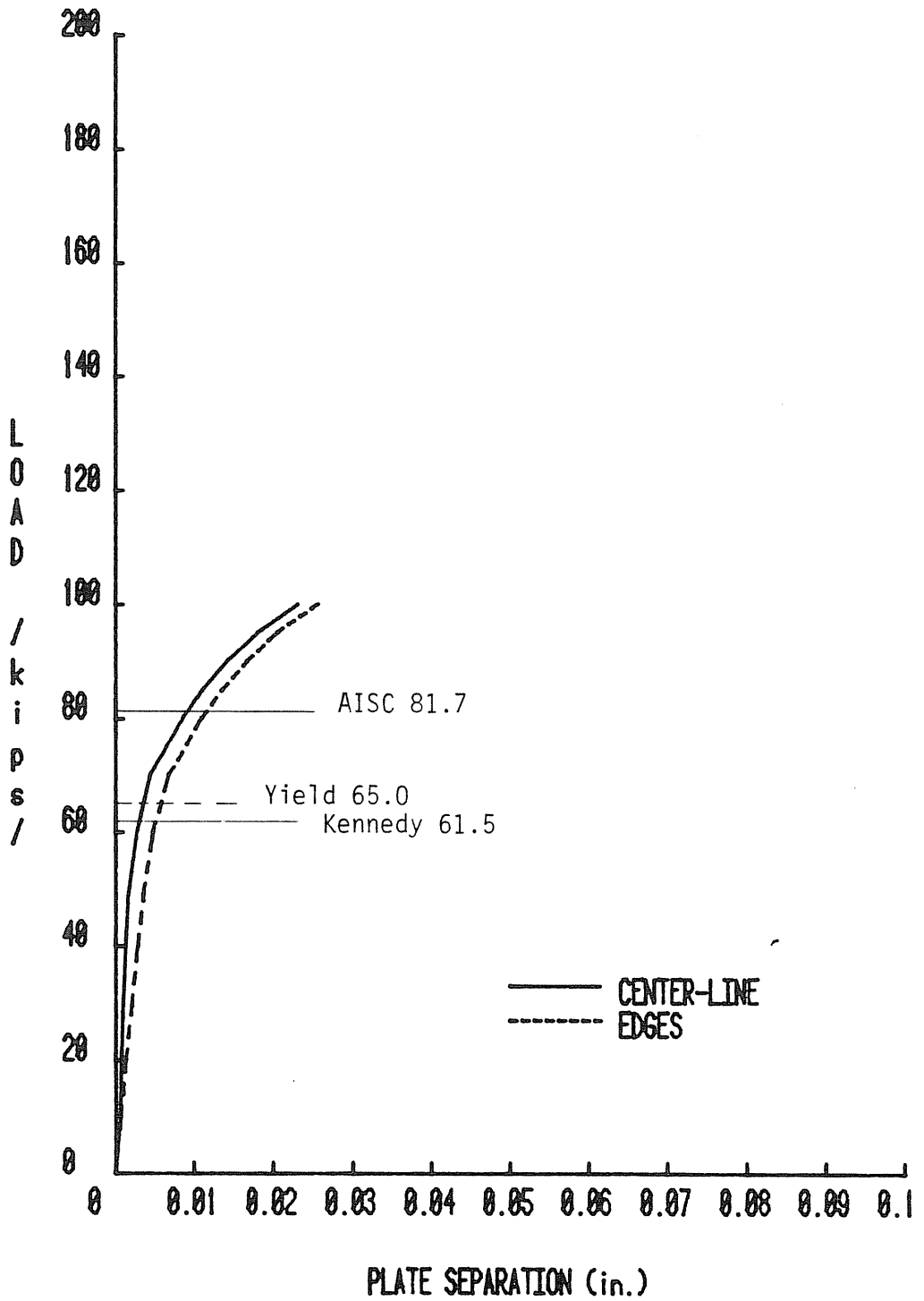

Figure C.12 Load vs. Plate Separation, CN-1A

VULCRAFT CONNECTION TEST SUMMARY

Project: VULCRAFT

Test No.: CN-2 (corresponds to FR-1)

Test Date: 2/20/84

Purpose: Verification of AISC design procedure

Number of Tension Bolts: 4 Bolt Gage(g): 4" Edge Distance: 1 1/2"

Bolt Diameter: 3/4" Flange Plate Thickness (t): 5/8"

Plate Width (w): 7" Plate Length (LL): 35"

Web Plate Thickness: 1"

Pretension Force per Bolt: 29 kips

Failure Load, (Total Load): 124.4

Failure Mode: Yielding of the angles and high bolt forces

Predicted Failure Loads:

Method: AISC (allow. load) Total Tensile Load: 45.03 kips

Method: AISC (1.67) Total Tensile Load: 75.20 kips

Maximum Plate Separation: East 0.0003" Centerline 0.0354"

Load at Which Maximum Plate Separation is Measured: 124 kips

Discussion:

Observations:

-Before testing, speciman was approximately 1/4 in. out-of-line (out of plane) towards the south.

-At 55 kips, loading appeared to have partially corrected the out-of-lineness to approximately 1/8 in.

-At 71.6 kips localized yielding was detected around south west bottom bolt at connection end.

-At 90 kips minor yielding of angles was detected in the welded legs.

-Prior to 115 kips yielding of top and bottom stems was detected and yielding of the angles was extensive.

-At 124 kips the test was terminated due to extensive yielding of the angles. Out-of-lineness was still approximately 1/8".

Loading:

-Maximum applied load was 124.4 kips.

-Maximum observed bolt force was 40.7 kips north bolt (2 x AISC allowable = 38.8 kips).

-Maximum applied load was 2.8 times AISC predicted load and 1.7 times AISC load with factor of safety removed.

-Test was stopped due to yielding of the angles, however, bolt forces were also high.

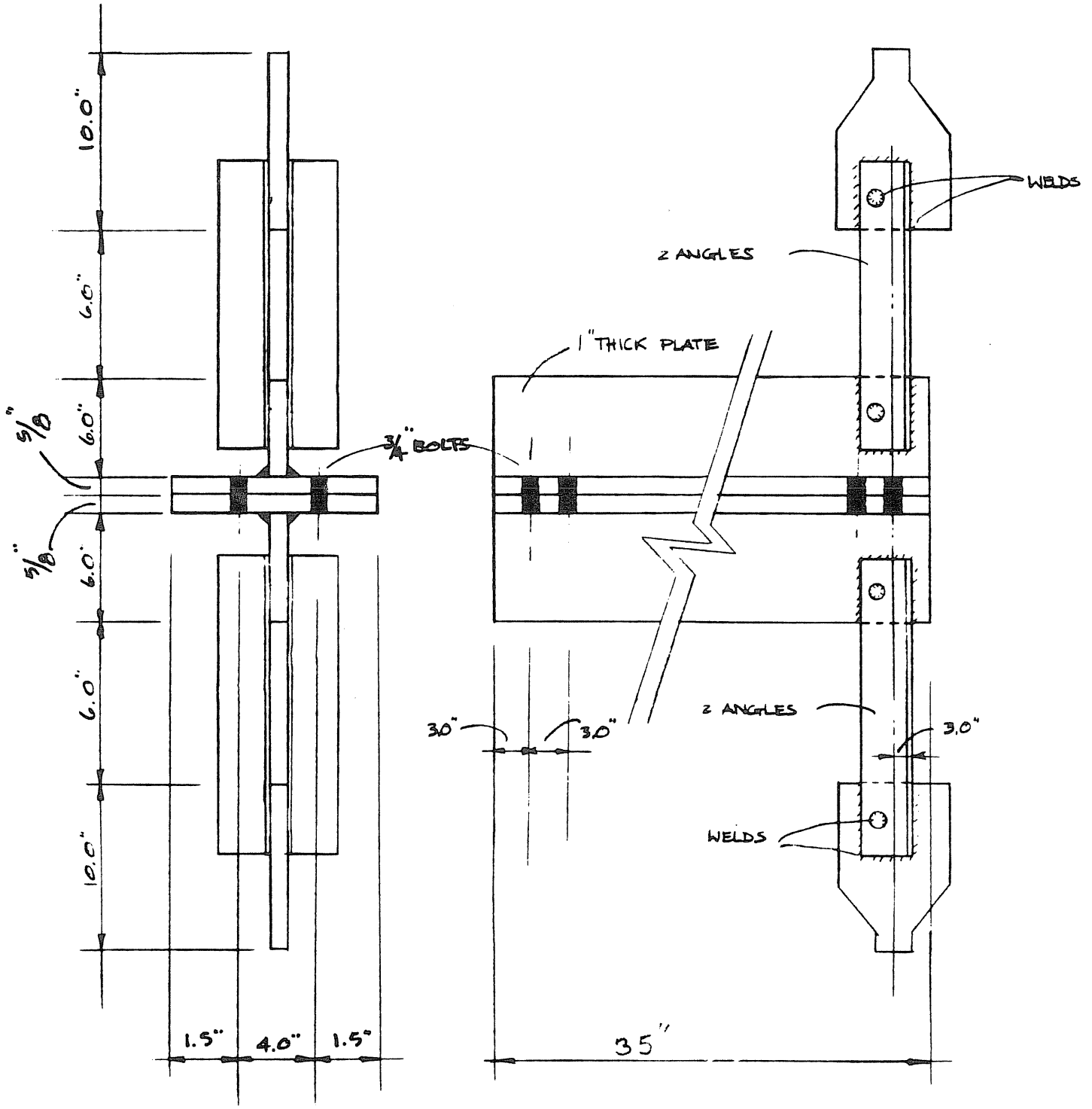

Figure C.13 Specimen Details, Test CN-2

Test CN-2
=========

Given:
---

tf=0.625 in.	(Thickness of flange in tee hanger)
a =1.500 in.	(Distance from bolt center to edge)
b =1.500 in.	(Distance from bolt center to web)
p =3.000 in.	(Width of tee hanger per bolt line)
Fy=50.00 ksi	(Yield stress of tee hanger plate)
Bolt type=A325	(Type of bolt. A325 or A490)
db=0.750 in.	(Diameter of Bolt)
B =38.88 kips.	(Ultimate capacity of bolt)
Fyb=88.00 kips.	(Yield stress of threaded bolt)
Ptb=27.21 kips.	(Pretension force in bolt=0.70 x B)

Solution:

According to the method outlined in Chapter 4 of the AISC Manual, the results are:

Service load capacity = 45.03 kips.
======

Service load capacity times 2.0= 90.06 kips.
======

Predicted failure mode is plate yielding

Predicted bolt force at factored load= 28.21 kips
======

According to the method outlined in THE SPLIT-TEE ANALOGY IN BOLTED SPLICES AND BEAM-COLUMN CONNECTIONS, by Kennedy et al published in Joints in Structural Steelwork, John Wiley & Sons, NY ,1981, pp.2.138-2.157, the results are:

Elastic load capacity = 38.44 kips
======

Ultimate load capacity = 71.94 kips
======

Predicted failure mode is plate yielding

Predicted bolt force at factored load= 27.21 kips
======

Figure C.14 AISC and Kennedy Analyses, Test CN-2

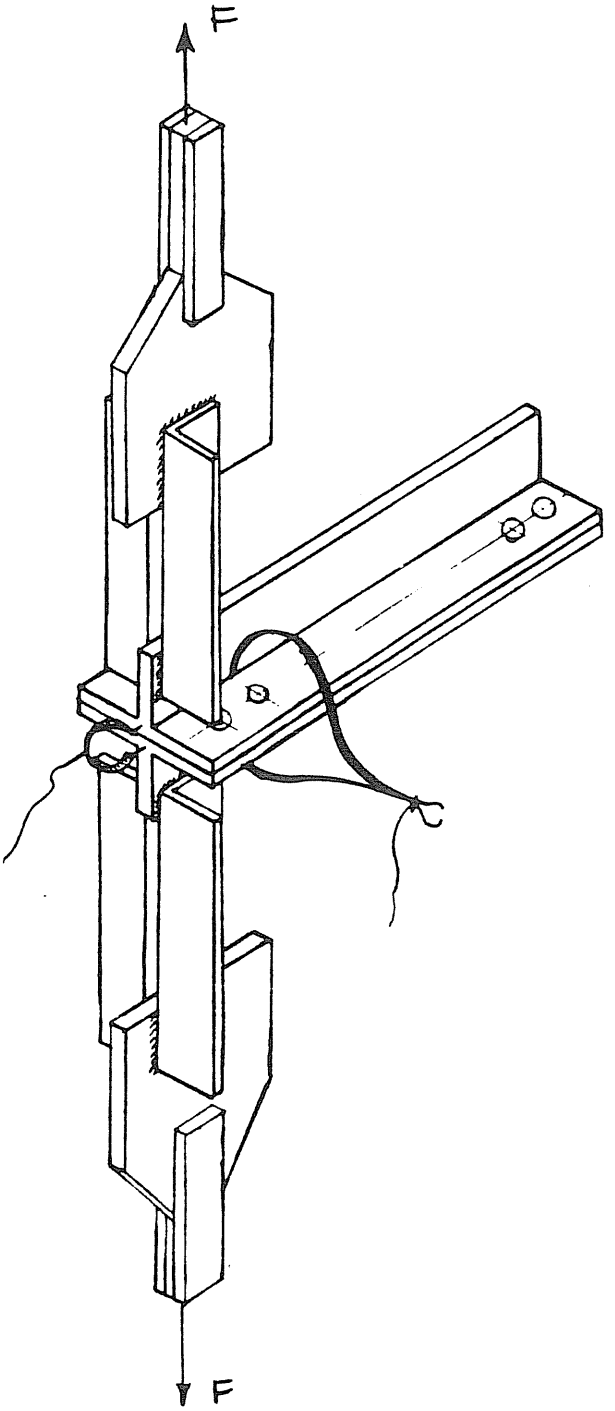

Figure C.15 Instrumentation, Test CN-2

USE A 36 MAT'L
FOR PLATES

NOTES

1. STACK DRILL HORIZ. PL'S
2. HOLD ALL TOLERANCES
3. CENTROID OF Δ'S TO LINE UP W/ CENTER OF HOLES AND CENTER OF PL1
4. 18" LONG BLANK REQ'D FOR EACH HAUNCH (FROM SAME STEEL) HORIZ. PL.
5. DO NOT WELD MORE THAN SHOWN.
6. DO NOT PAINT OR MARK ANY MAT'L

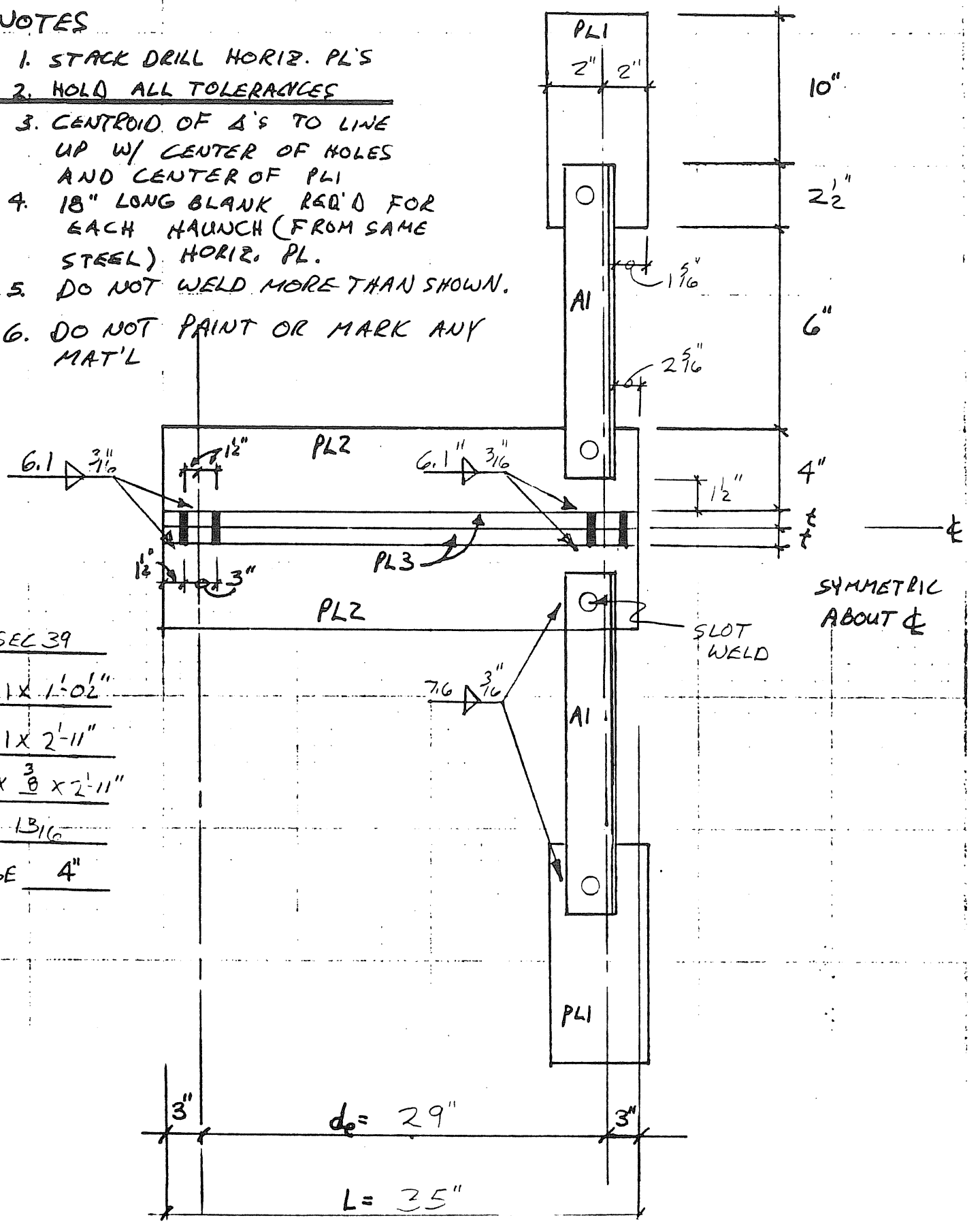

A1 2 - SEC 39

PL1 4 x 1 x 1'-0½"

PL2 4 x 1 x 2'-11"

PL3 7 x ⅜ x 2'-11"

HOLE Ø 13/16

HOLE GAGE 4"

Figure C.16 Shop Details, Test CN-2

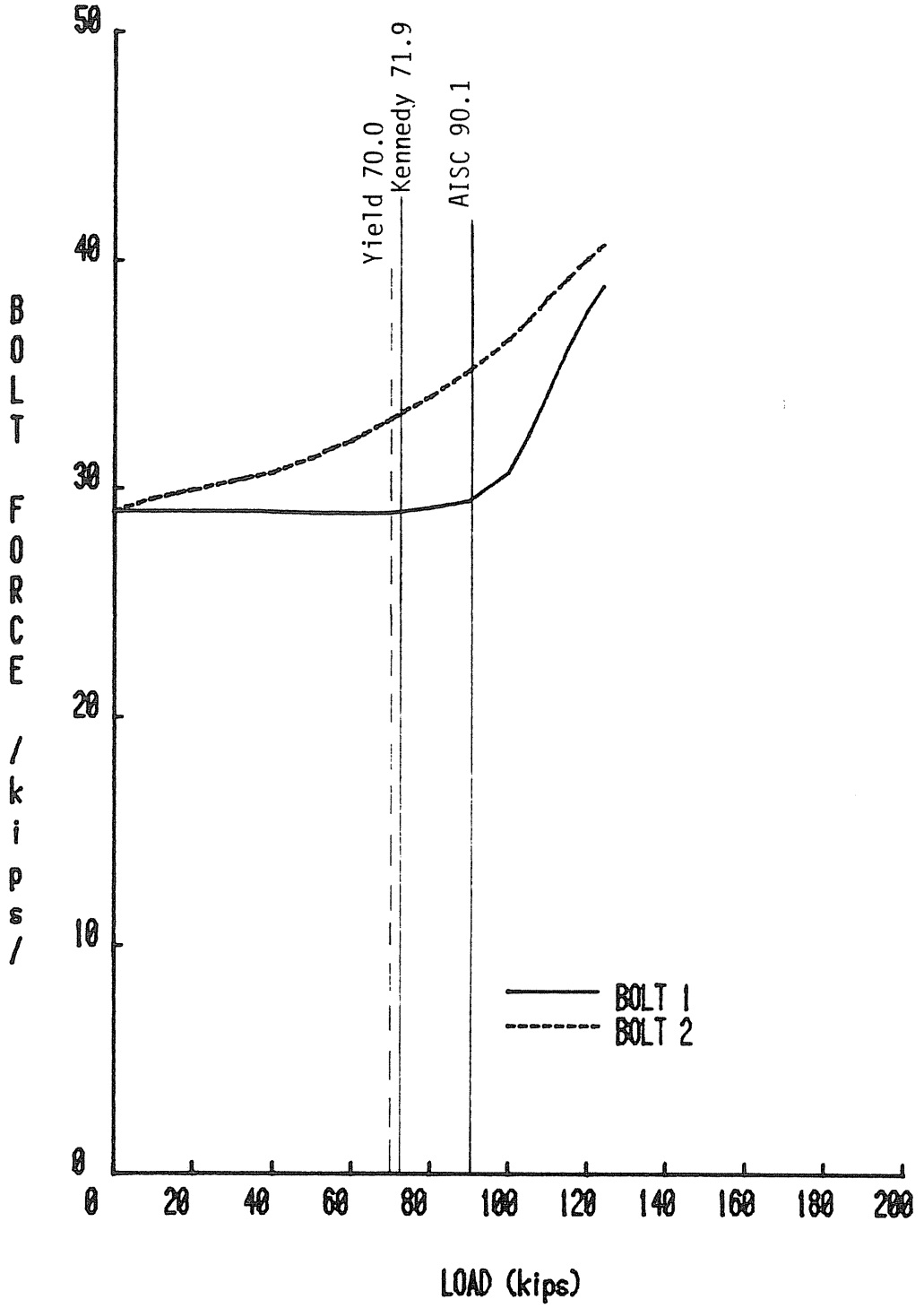

Figure C.17 Load vs. Bolt Force, CN-2

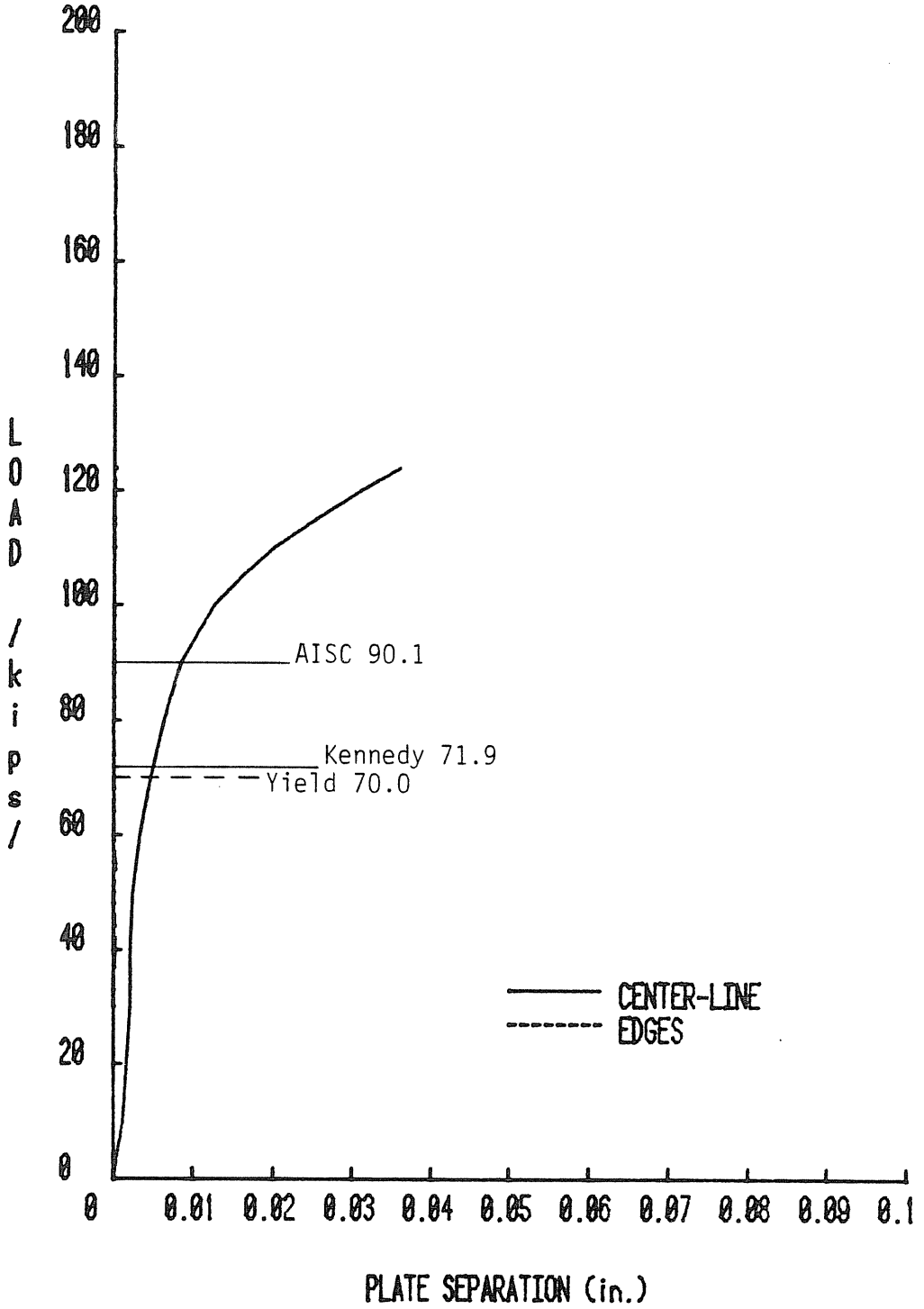

Figure C.18 Load vs. Plate Separation, CN-2

VULCRAFT CONNECTION TEST SUMMARY

Project: VULCRAFT

Test No.: CN-2A

Test Date: 2/24/84

Purpose: Observation of connection behavior with a thin shim between plates in the line of the web.

Number of Tension Bolts: 4" **Bolt Gage(g):** 4" **Edge Distance:** 1 1/2"

Bolt Diameter: 3/4" **Flange Plate Thickness (t):** 5/8"

Plate Width (w): 7" **Plate Length (de):** 35"

Web Plate Thickness: 1"

Pretension Force per Bolt: 28.7 kips

Failure Load, (Total Load): 136 kips

Failure Mode: High bolt forces

Predicted Failure Loads:

Method: AISC (allow. load) **Total Tensile Load:** N.A.

Method: AISC (1.67) **Total Tensile Load:** N.A.

Maximum Plate Separation: East: 0.0542" Centerline: 0.0356"

Load at Which Maximum Plate Separation is Measured: 136 kips

Discussion:

Observations:

-Before start of test a thin shim plate was placed between the connection plates in the line of the web.

-Before start of test some local yielding was observed in the immediate vicinity of the following bolts: northeast bottom, southwest top, and both south bottom.

-At 136 kips the test was stopped due to high bolt forces, yield lines were observed in both the top and bottom south bolt lines, and in the bottom north bolt line. A very minimal amount of yielding was detected on the top north bolt line.

Loading:

-Maximum applied load was 136 kips.

-Maximum observed bolt force was 45.6 kips, south bolt (2 x AISC allowable = 38.8 kips).

-Maximum applied load was 4.1 times AISC predicted load and 2.5 times AISC load with factor of safety removed. (AISC load is calculated for specimen without shim)

-Test was stopped due to high bolt forces.

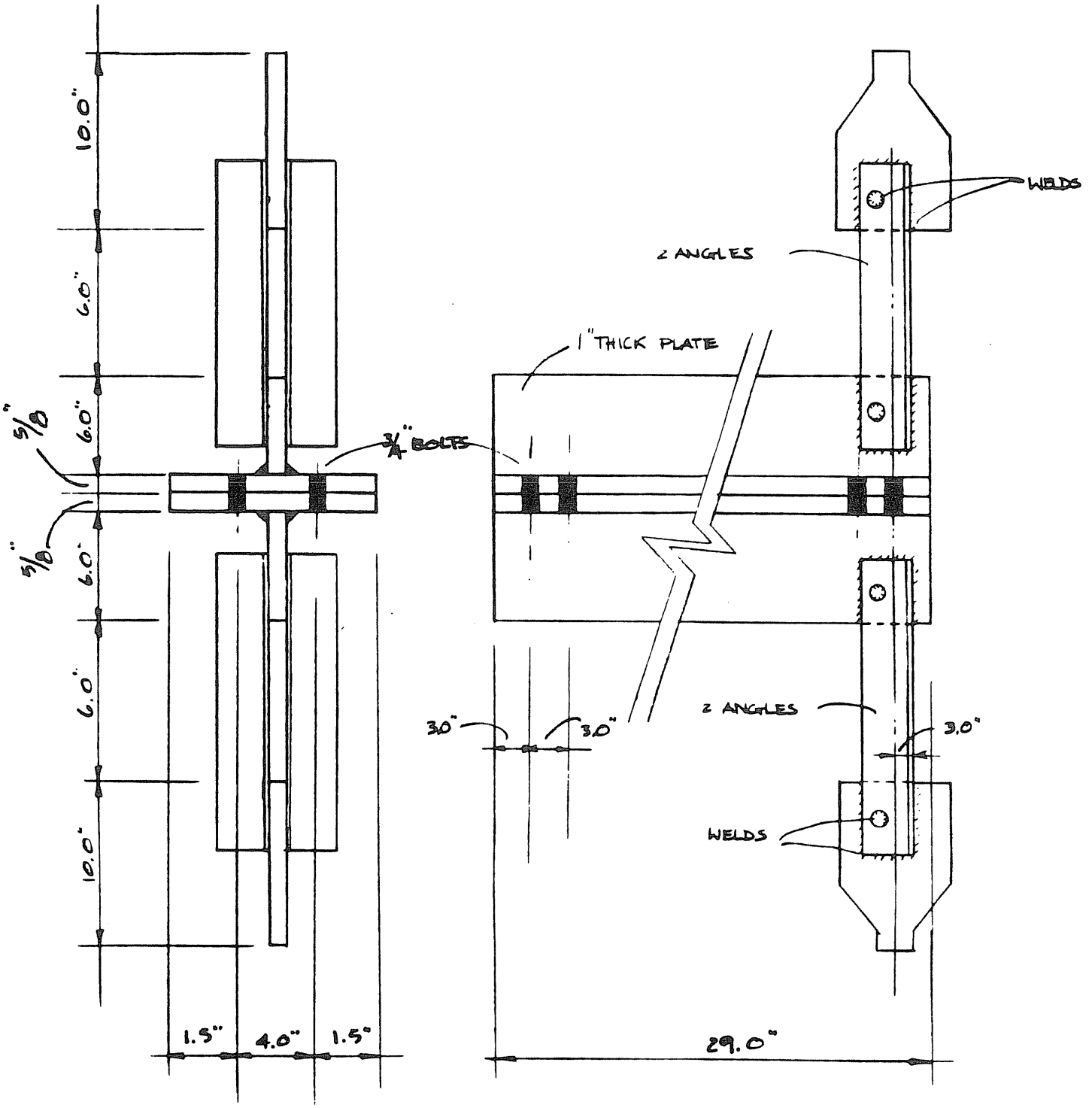

Figure C.19 Specimen Details, Test CN-2A

Test CN-2A
==========

Given:
---

tf=0.625 in.	(Thickness of flange in tee hanger)
a =1.500 in.	(Distance from bolt center to edge)
b =1.500 in.	(Distance from bolt center to web)
p =3.000 in.	(Width of tee hanger per bolt line)
Fy=50.00 ksi	(Yield stress of tee hanger plate)
Bolt type=A325	(Type of bolt. A325 or A490)
db=0.750 in.	(Diameter of Bolt)
B =38.88 kips.	(Ultimate capacity of bolt)
Fyb=88.00 kips.	(Yield stress of threaded bolt)
Ptb=27.21 kips.	(Pretension force in bolt=0.70 x B)

Solution:

According to the method outlined in Chapter 4 of the AISC Manual, the results are:

Service load capacity = 45.03 kips.
======

Service load capacity times 2.0= 90.06 kips.
======

Predicted failure mode is plate yielding

Predicted bolt force at factored load= 28.21 kips
======

According to the method outlined in THE SPLIT-TEE ANALOGY IN BOLTED SPLICES AND BEAM-COLUMN CONNECTIONS, by Kennedy et al published in Joints in Structural Steelwork, John Wiley & Sons, NY ,1981, pp.2.138-2.157, the results are:

Elastic load capacity = 38.44 kips
======

Ultimate load capacity = 71.94 kips
======

Predicted failure mode is plate yielding

Predicted bolt force at factored load= 27.21 kips
======

Figure C.20 AISC and Kennedy Analyses, Test CN-2A

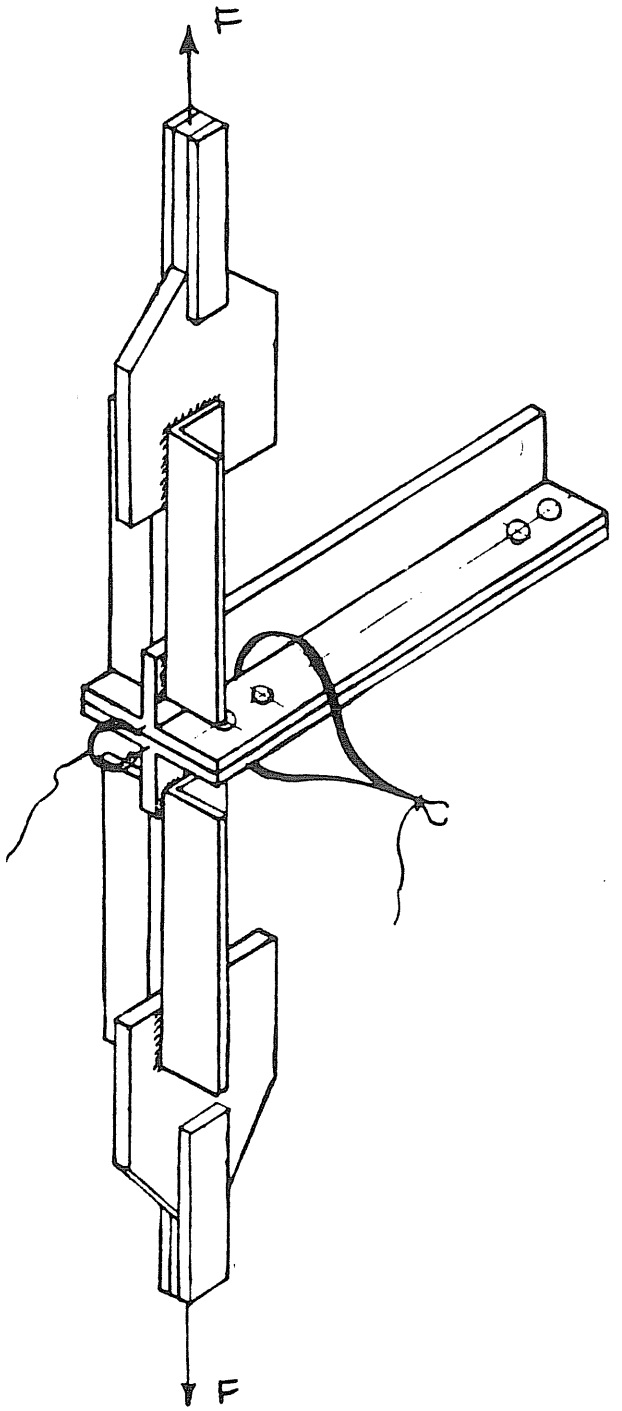

Figure C.21 Instrumentation, Test CN-2A

USE A36 MAT'L
FOR PLATES

NOTES

1. STACK DRILL HORIZ. PL'S
2. HOLD ALL TOLERANCES
3. CENTROID OF Δ'S TO LINE UP W/ CENTER OF HOLES AND CENTER OF PL1
4. 18" LONG BLANK REQ'D FOR EACH HAUNCH (FROM SAME STEEL) HORIZ. PL.
5. DO NOT WELD MORE THAN SHOWN.
6. DO NOT PAINT OR MARK ANY MAT'L

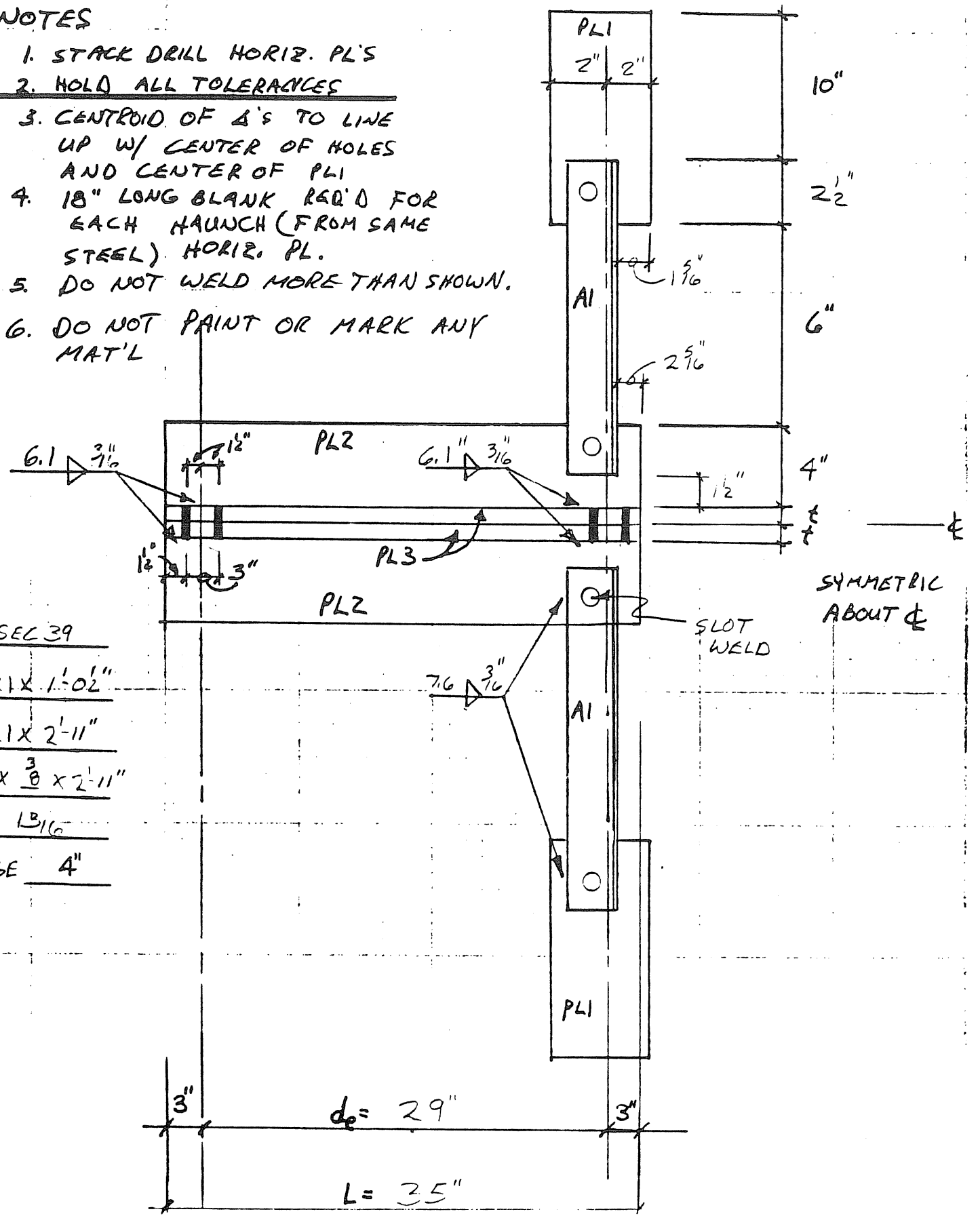

A1 2 - SEC 39

PL1 4x1x 1'-0½"

PL2 4x1x 2'-11"

PL3 7x ⅜ x 2'-11"

HOLE Ø 13/16

HOLE GAGE 4"

Figure C.22 Shop Details, Test CN-2A

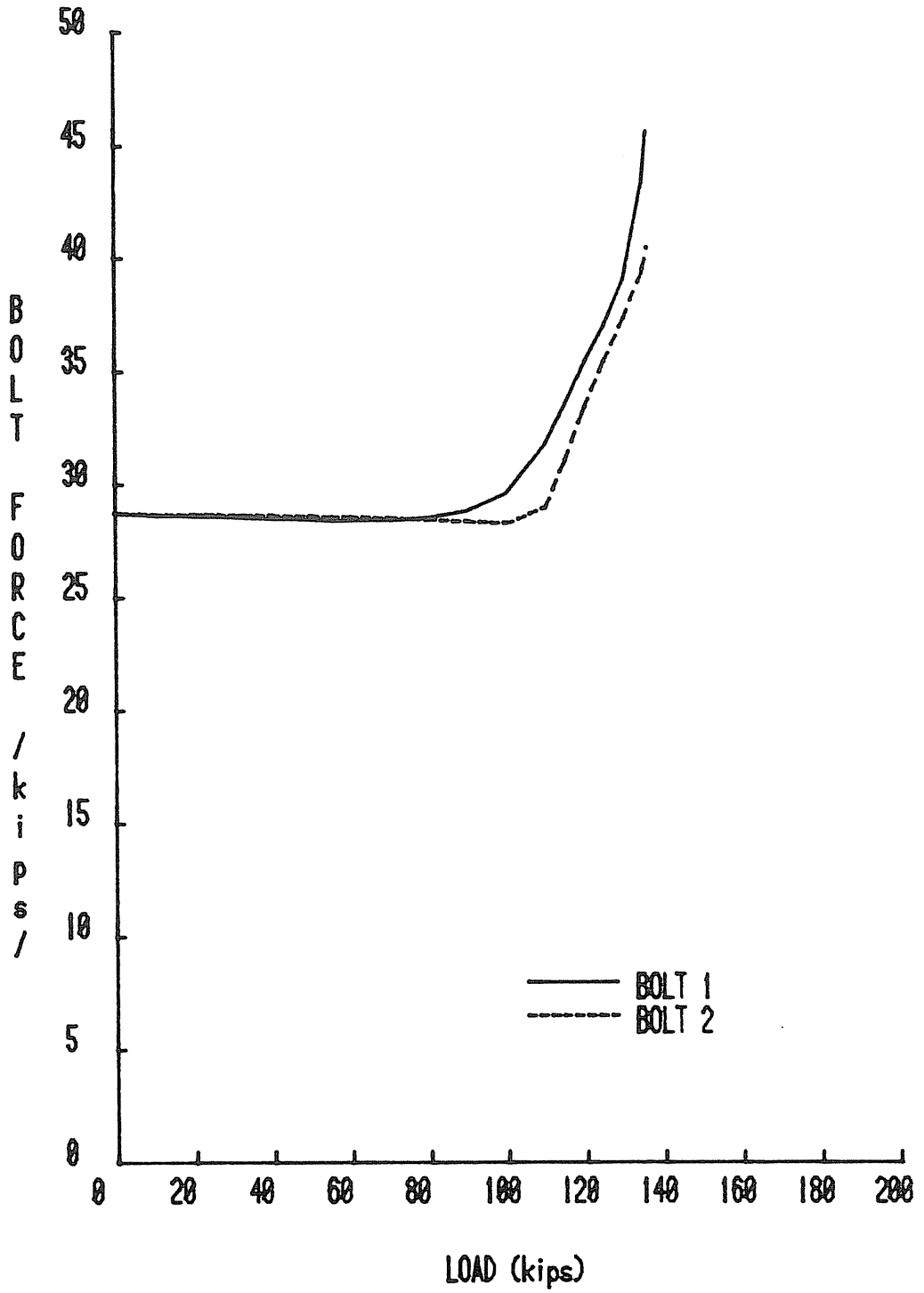

Figure C.23 Load vs. Bolt Force, CN-2A

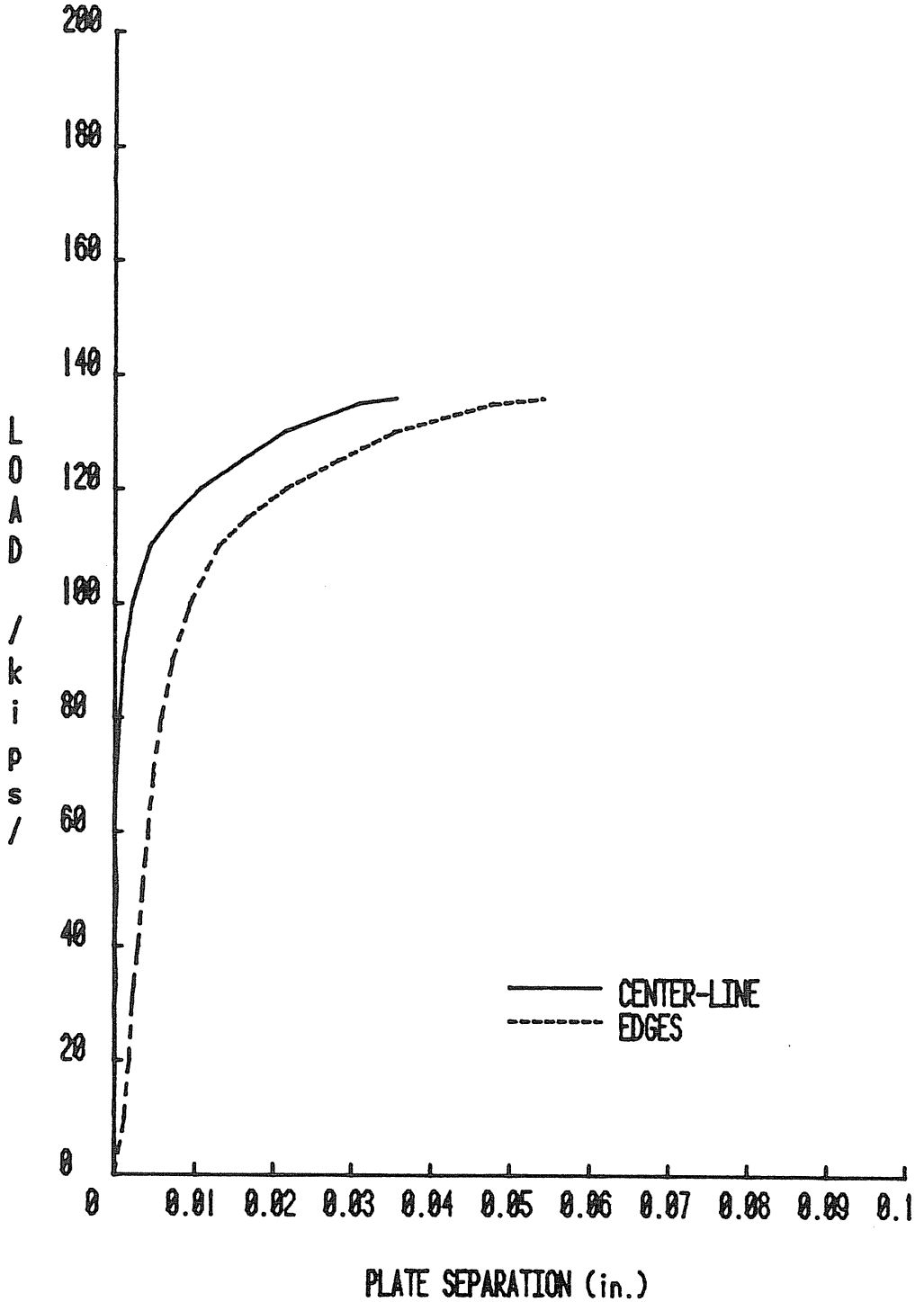

Figure C.24 Load vs. Plate Separation, CN-2A

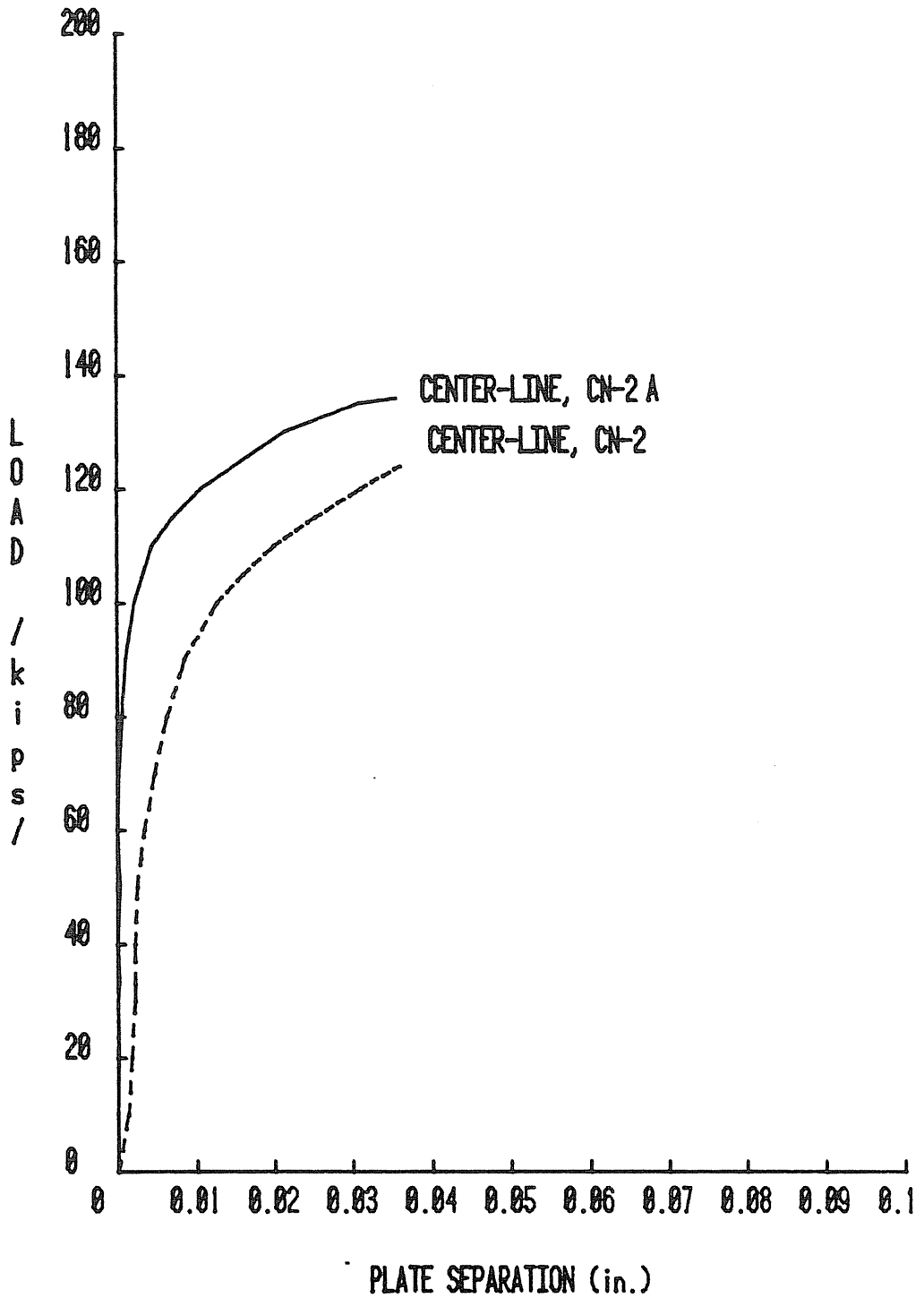

Figure C.25 Load vs. Plate Separation, CN-2 & CN-2A

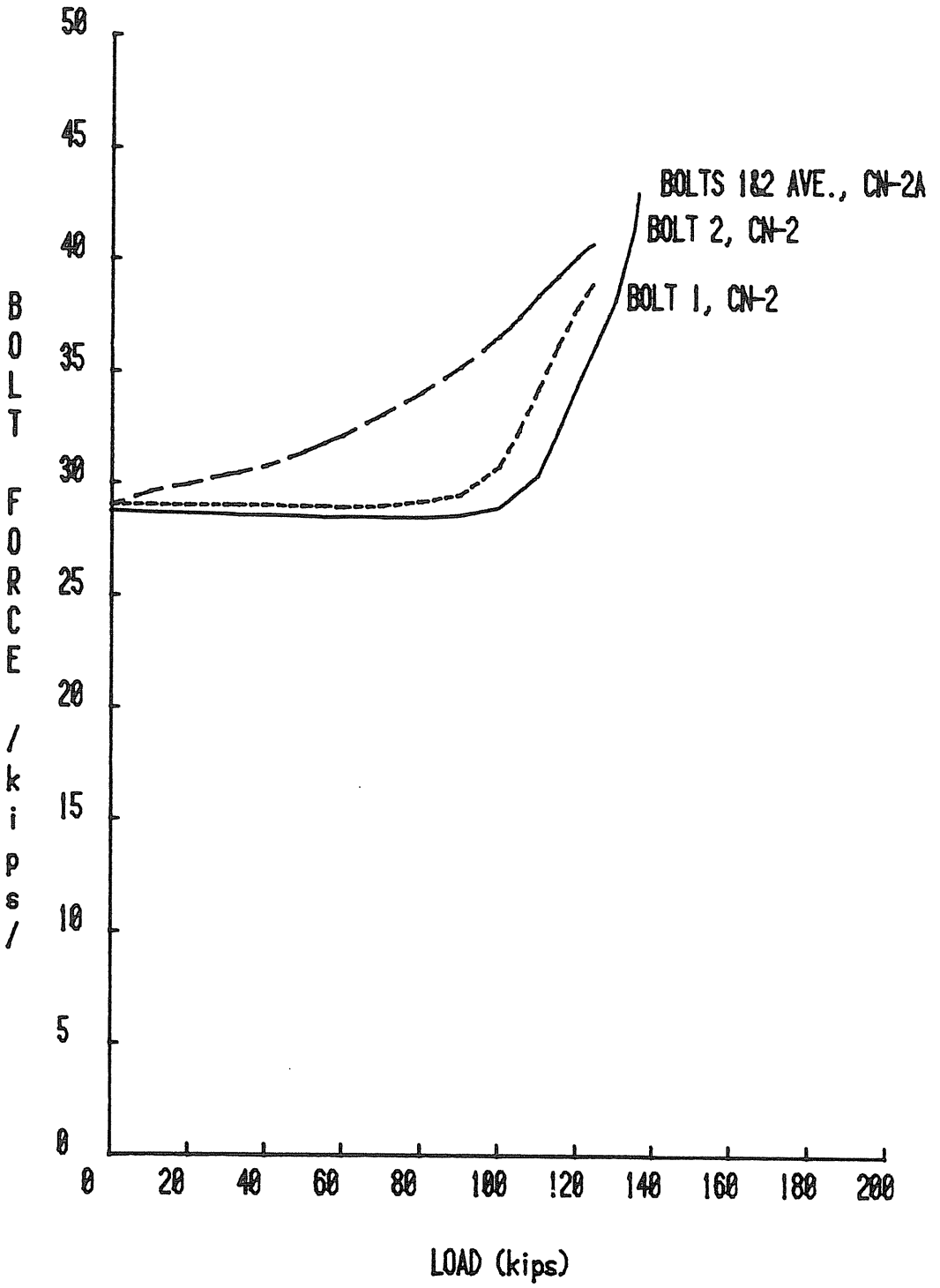

Figure C.26 Load vs. Bolt Force, CN-2 & CN-2A

VULCRAFT CONNECTION TEST SUMMARY

Project: VULCRAFT

Test No.: CN-3 (corresponds to TH-5)

Test Date: 2/22/84

Purpose: Verification of AISC design procedure

Number of Tension Bolts: 4 Bolt Gage(g): 3 1/2" **Edge Distance:** 1 1/2"

Bolt Diameter: 3/4" Flange Plate Thickness (t): 3/4"

Plate Width (w): 6 1/2" Plate Length (de): 47"

Web Plate Thickness: 1"

Pretension Force per Bolt: 29 kips

Failure Load, (Total Load): 150 kips

Failure Mode: High bolt forces

Predicted Failure Loads:

Method: AISC (allow. load) Total Tensile Load: 77.75 kips

Method: AISC (1.67) Total Tensile Load: 129.84 kips

Maximum Plate Separation: East: 0.0257" Centerline: 0.0189"

Load at Which Maximum Plate Separation is Measured: 135 kips

Discussion:

Observations:

-Specimen appeared to be straight before test.

-At 102 kips small yielding was detected on south bottom web between angle and flange.

-At 120 kips the yielding of bottom south web increased and small yielding of south top web between angle and flange was detected.

-At 130 kips localized yielding around northwest tension bolt was detected.

-At 135 kips a small amount of yielding was detected on anchor stems.

-At 135 kips bolt forces were very high, therefore the load was released and all instrumentation was removed, then the specimen was reloaded to 150 kips.

-At 150 kips there was a small amount of yielding in the bottom south angle.

Loading:

-Maximum applied load was 150 kips.

-Maximum observed bolt force was 42.1 kips, northwest bolt (2 x AISC allowable = 38.8 kips).

-Maximum applied load was 1.9 times AISC predicted load and 1.2 times AISC load with factor of safety removed.

-Instrumentation was removed at 135 kips due to high bolt forces.

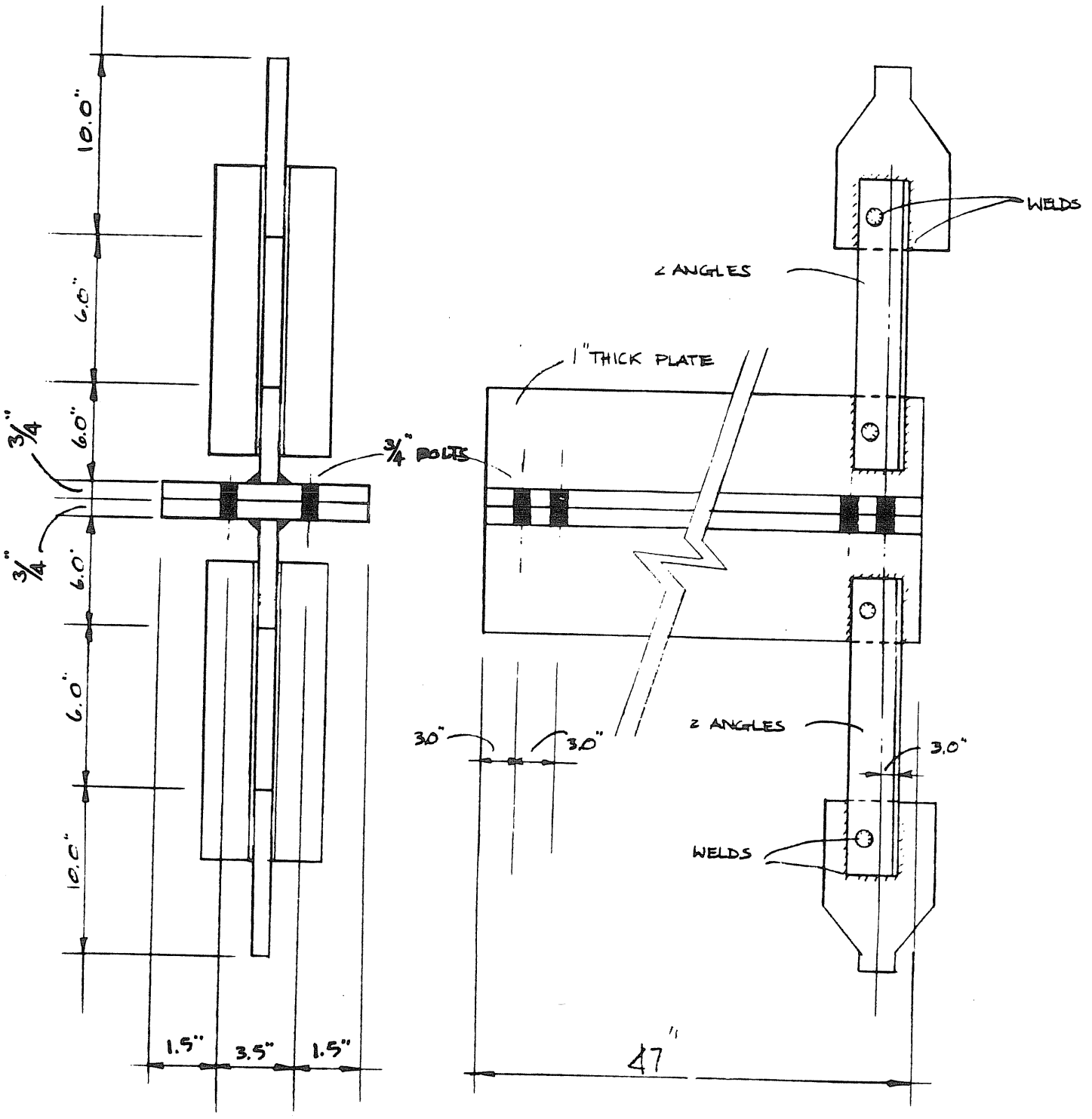

Figure C.27 Specimen Details, Test CN-3

Test CN-3
=========

Given:
---

tf=0.750 in.	(Thickness of flange in tee hanger)
a =1.500 in.	(Distance from bolt center to edge)
b =1.250 in.	(Distance from bolt center to web)
p =3.000 in.	(Width of tee hanger per bolt line)
Fy=50.00 ksi	(Yield stress of tee hanger plate)
Bolt type=A325	(Type of bolt. A325 or A490)
db=0.750 in.	(Diameter of Bolt)
B =38.88 kips.	(Ultimate capacity of bolt)
Fyb=88.00 kips.	(Yield stress of threaded bolt)
Ptb=27.21 kips.	(Pretension force in bolt=0.70 x B)

Solution:

According to the method outlined in Chapter 4 of the AISC Manual, the results are:

Service load capacity = 77.75 kips.
======

Service load capacity times 2.0=155.51 kips.
======

Predicted failure mode is bolt rupture

Predicted bolt force at factored load= 38.88 kips
======

According to the method outlined in THE SPLIT-TEE ANALOGY IN BOLTED SPLICES AND BEAM-COLUMN CONNECTIONS, by Kennedy et al published in Joints in Structural Steelwork, John Wiley & Sons, NY ,1981, pp.2.138-2.157, the results are:

Elastic load capacity = 65.33 kips
======

Ultimate load capacity =112.16 kips
======

Predicted failure mode is plate yielding

Predicted bolt force at factored load= 36.30 kips
======

Figure C.28 AISC and Kennedy Analyses, Test CN-3

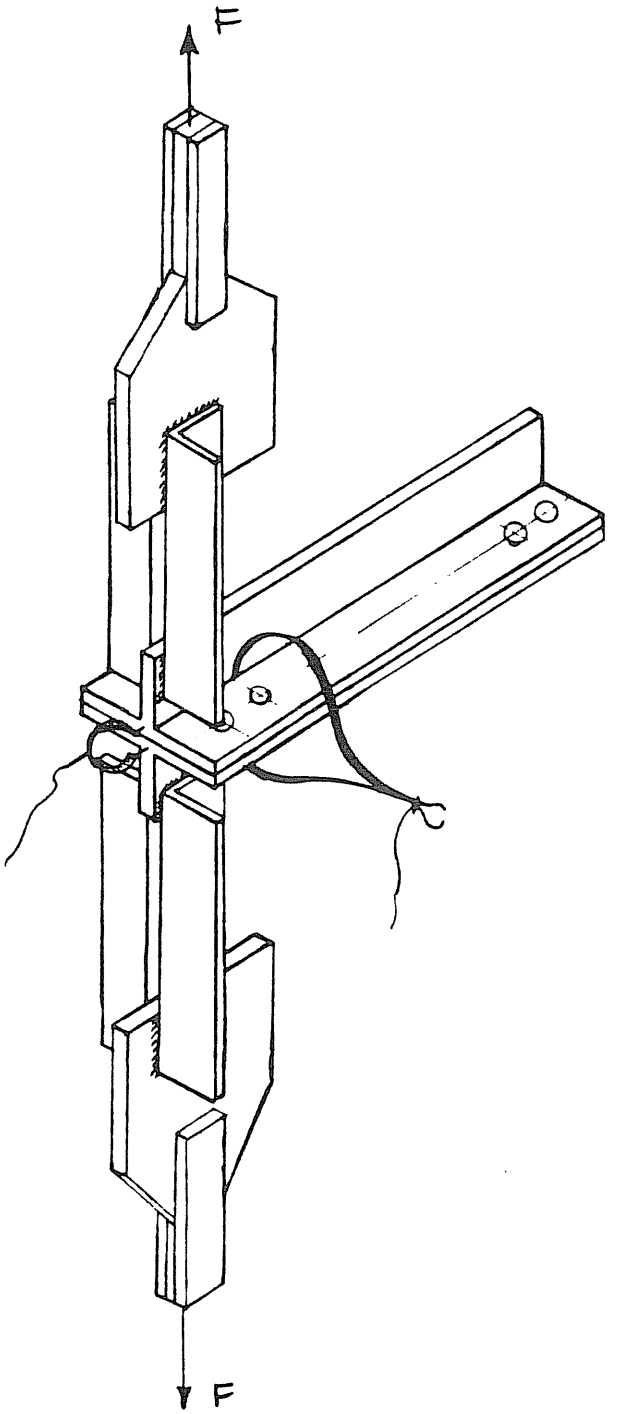

Figure C.29 Instrumentation, Test CN-3

USE A36 MAT'L
FOR PLATES

NOTES

1. STACK DRILL HORIZ. PL'S
2. HOLD ALL TOLERANCES
3. CENTROID OF Δ'S TO LINE UP W/ CENTER OF HOLES AND CENTER OF PL1
4. 18" LONG BLANK REQ'D FOR EACH HAUNCH (FROM SAME STEEL) HORIZ. PL.
5. DO NOT WELD MORE THAN SHOWN
6. DO NOT PAINT OR MARK ANY MATERIAL

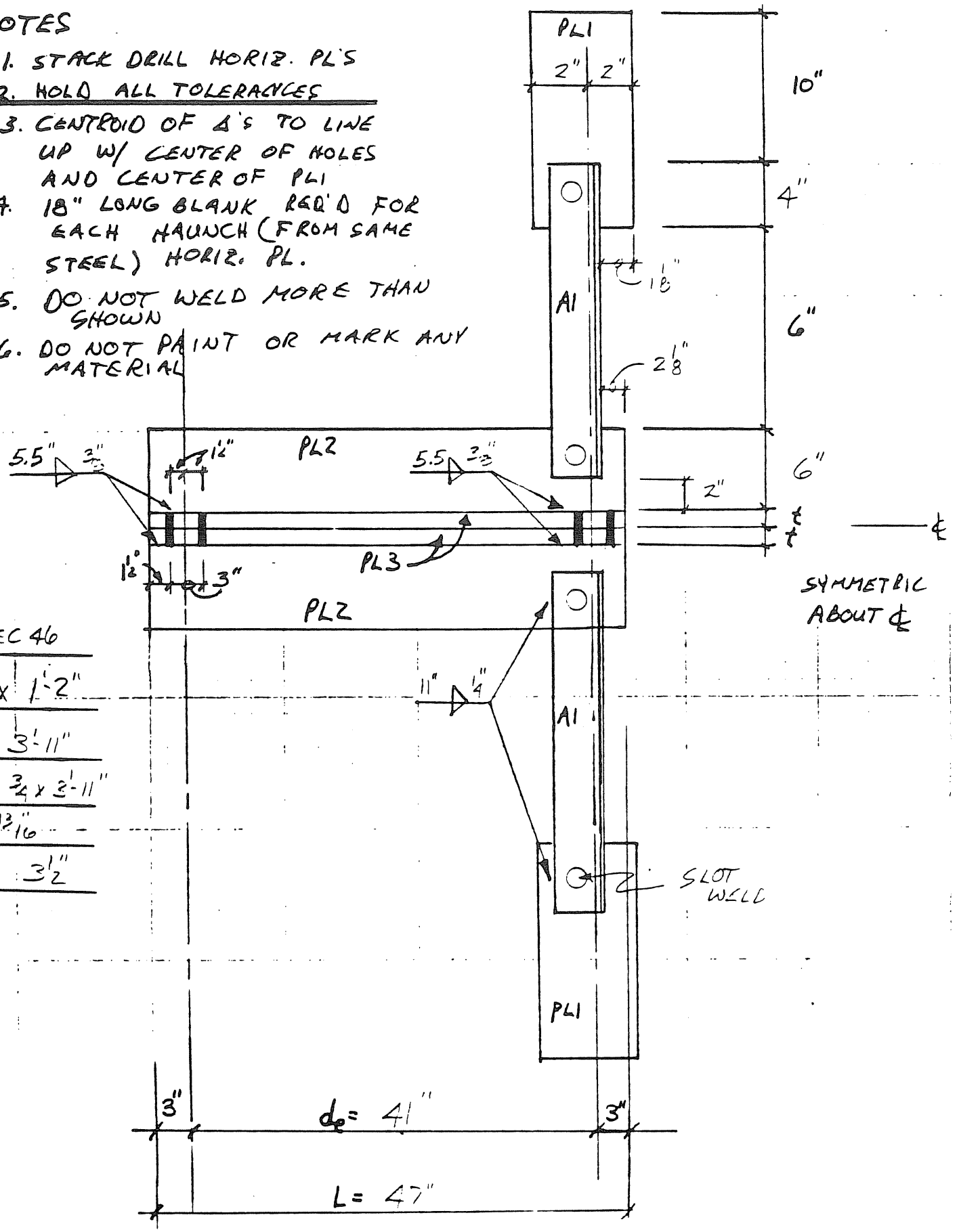

Figure C.30 Shop Details, Test CN-3

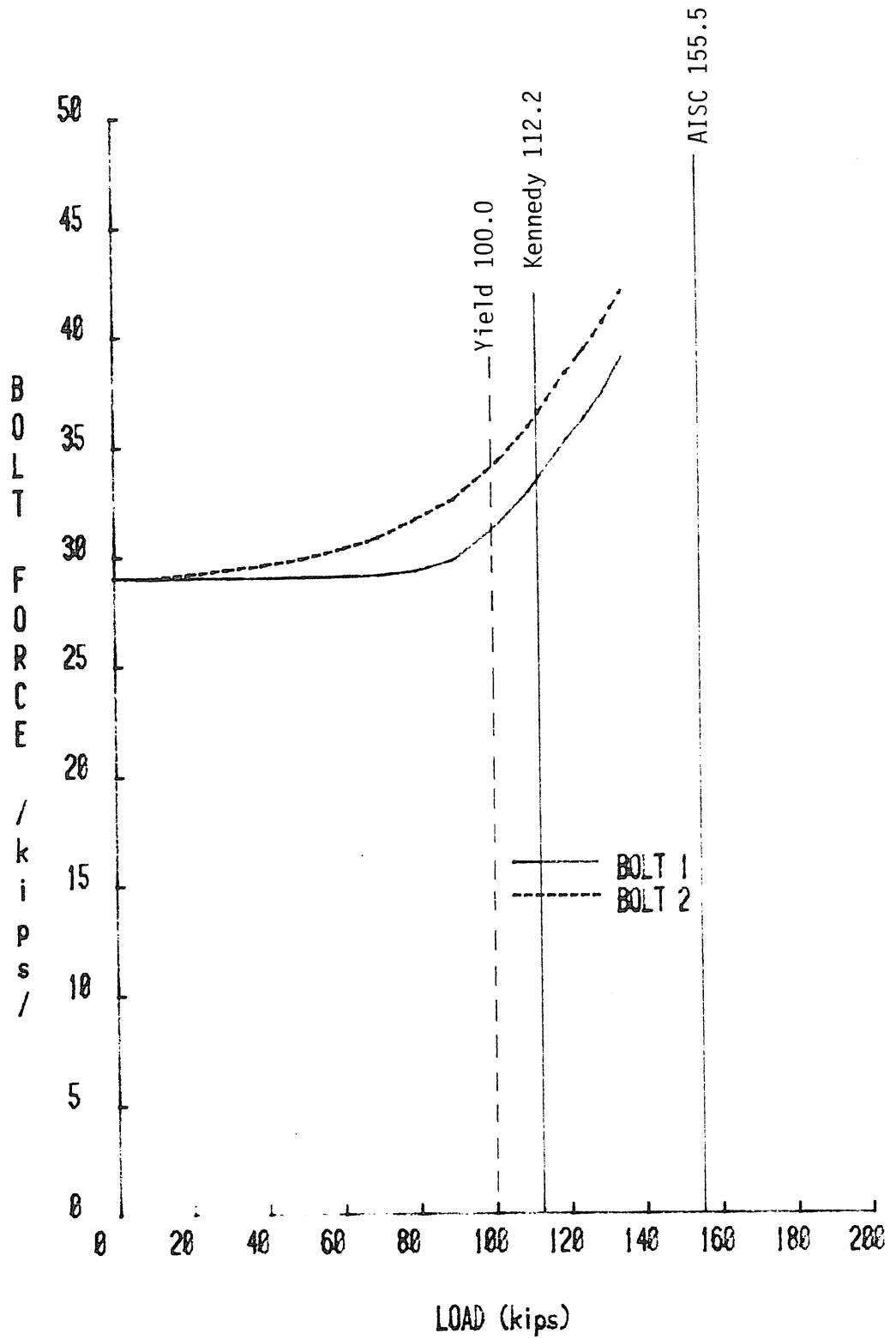

Figure C.31 Load vs. Bolt Force, CN-3

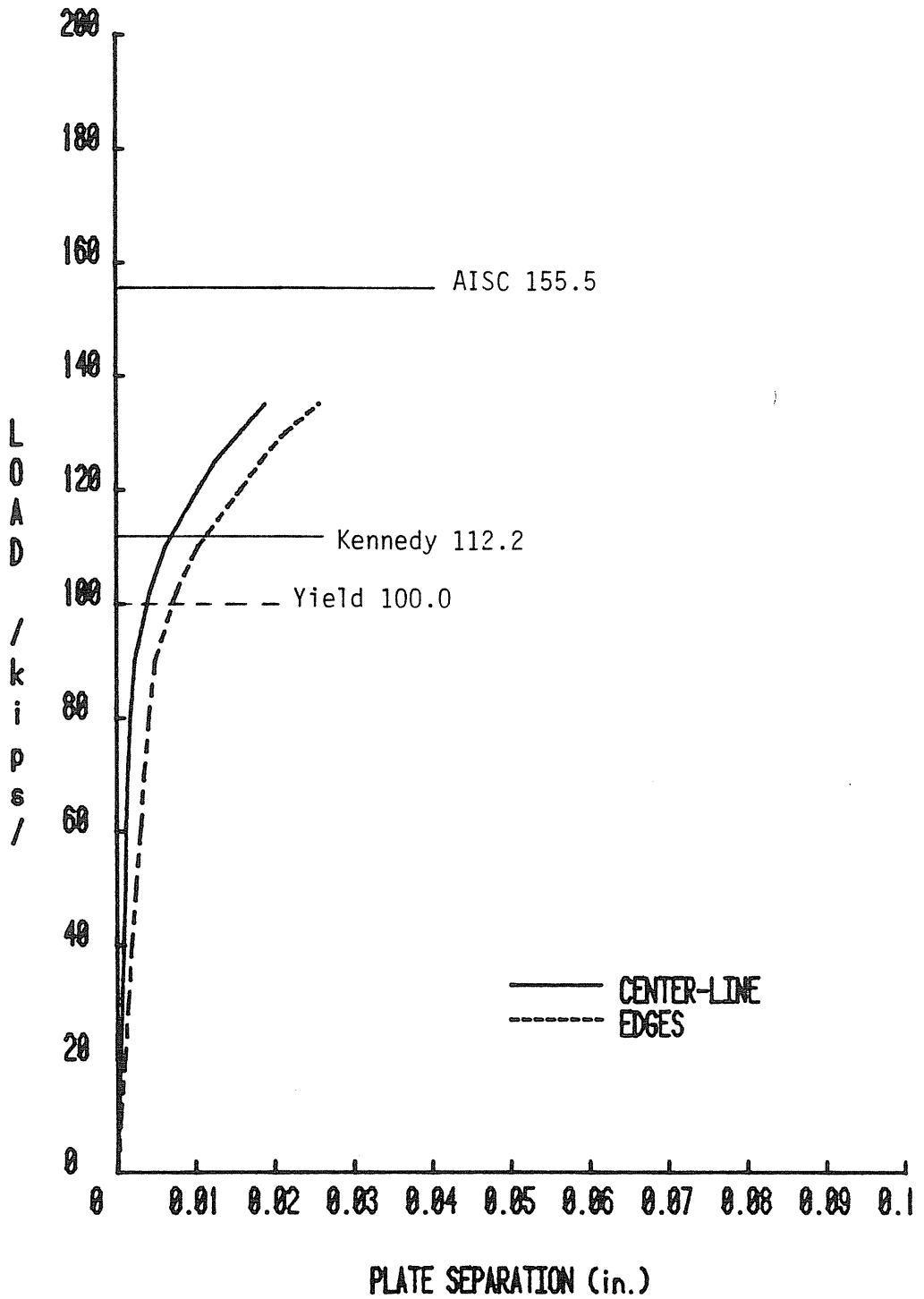

Figure C.32 Load vs. Plate Separation, CN-3

VULCRAFT CONNECTION TEST SUMMARY

Project: VULCRAFT

Test No.: CN-4

Test Date: 2/22/84

Purpose: Verification of AISC design procedure

Number of Tension Bolts: 4 **Bolt Gage(g):** 4 1/2" **Edge Distance:** 1 1/2"

Bolt Diameter: 1" **Flange Plate Thickness (t):** 1"

Plate Width (w): 7 1/2" **Plate Length (de):** 64"

Web Plate Thickness: 1"

Pretension Force per Bolt: 51.4 kips

Failure Load, (Total Load): 192.3 kips

Failure Mode: Failure web-to-flange welds

Predicted Failure Loads:

Method: AISC (allow. load) Total Tensile Load: 98.75 kips

Method: AISC (1.67) Total Tensile Load: 164.91 kips

Maximum Plate Separation: East: 0.0308" Centerline: 0.0112"

Load at Which Maximum Plate Separation is Measured: 190 kips

Discussion:

Observations:

-Before test webs appeared to be offset approximately 1/8" at tension end connection.

-At approximately 100 kips, slight yielding of top stem was detected.

-At 160 kips yielding of angles near welds was detected.

-At 165 kips yielding of angles more extensive, particularly near cut-outs for bolt access.

-At 175 kips additional web yielding was detected.

-At 192.3 kips web-to-flange weld failed.

Loading:

-Maximum applied load was 192.3 kips.

-Maximum observed bolt force was 73.0 kips at a loading of 190 kips (2 x AISC allowable = 69.2 kips).

-Maximum applied load was 1.9 times AISC predicted load and 1.2 times AISC load with safety factor removed.

-Rupture of web-to-flange weld occured suddenly at 192.3 kips, however, bolt forces were also above ultimate.

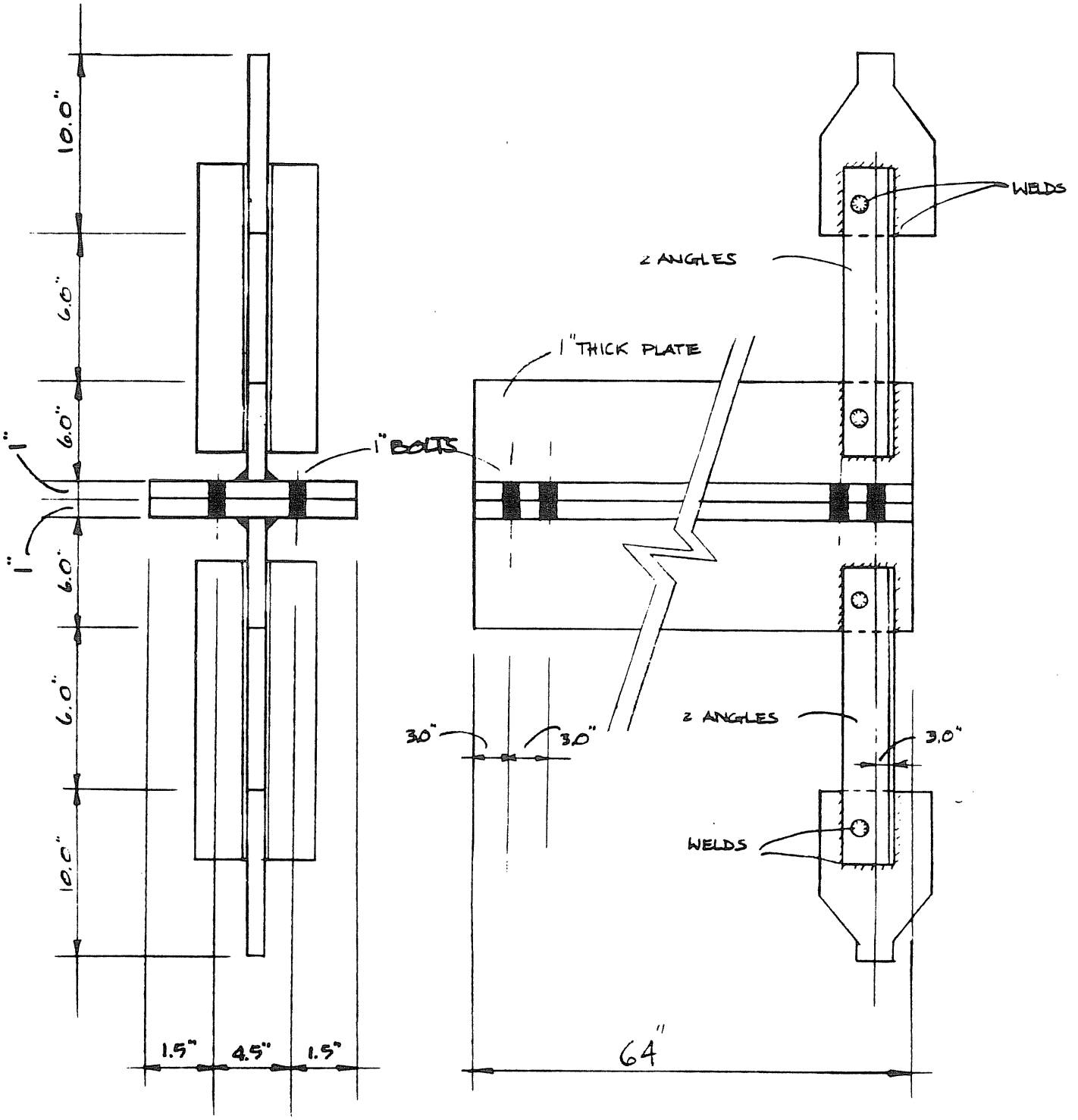

Figure C.33 Specimen Details, Test CN-4

Test CN-4
=========

Given:

```
tf=1.000 in.        (Thickness of flange in tee hanger)
a =1.500 in.        (Distance from bolt center to edge)
b =1.750 in.        (Distance from bolt center to  web)
p =3.000 in.        (Width of tee hanger per bolt line)
Fy=50.00 ksi        (Yield stress of  tee hanger plate)
Bolt type=A325            (Type of bolt.  A325 or A490)
db=1.000 in.                        (Diameter of Bolt)
B =69.11 kips.              (Ultimate capacity of bolt)
Fyb=88.00 kips.         (Yield stress of threaded bolt)
Ptb=48.38 kips.     (Pretension force in bolt=0.70 x B)
```

Solution:

According to the method outlined in Chapter 4 of the AISC Manual, the results are:

Service load capacity = 98.75 kips.
======

Service load capacity times 2.0=197.50 kips.
======

Predicted failure mode is plate yielding

Predicted bolt force at factored load= 61.48 kips
======

According to the method outlined in THE SPLIT-TEE ANALOGY IN BOLTED SPLICES AND BEAM-COLUMN CONNECTIONS, by Kennedy et al published in Joints in Structural Steelwork, John Wiley & Sons, NY ,1981, pp.2.138-2.157, the results are:

Elastic load capacity = 83.21 kips
======

Ultimate load capacity =140.98 kips
======

Predicted failure mode is plate yielding

Predicted bolt force at factored load= 48.38 kips
======

Figure C.34 AISC and Kennedy Analyses, Test CN-4

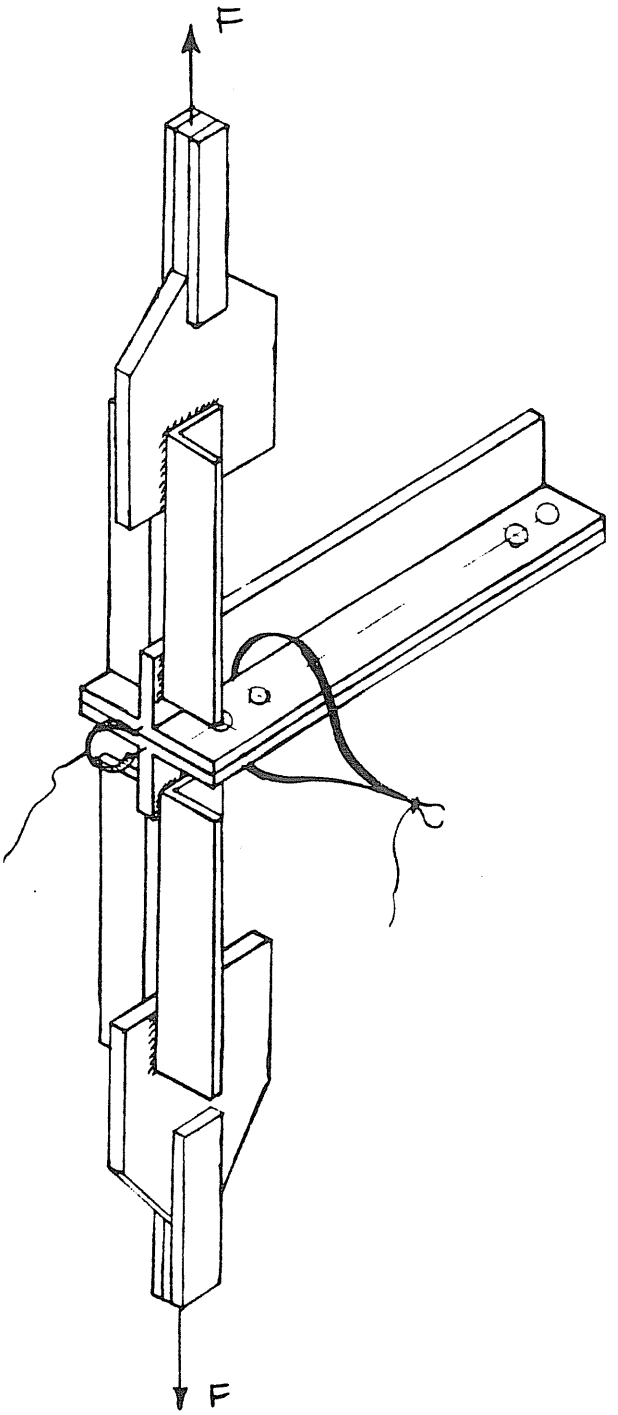

Figure C.35 Instrumentation, Test CN-4

USE A36 MAT'L
FOR PLATES

NOTES

1. STACK DRILL HORIZ. PL'S
2. HOLD ALL TOLERANCES
3. CENTROID OF Δ'S TO LINE UP W/ CENTER OF HOLES AND CENTER OF PL1
4. 18" LONG BLANK REQ'D FOR EACH HAUNCH (FROM SAME STEEL) HORIZ. PL.
5. DO NOT WELD MORE THAN SHOWN
6. DO NOT PAINT OR MARK ANY MAT'L

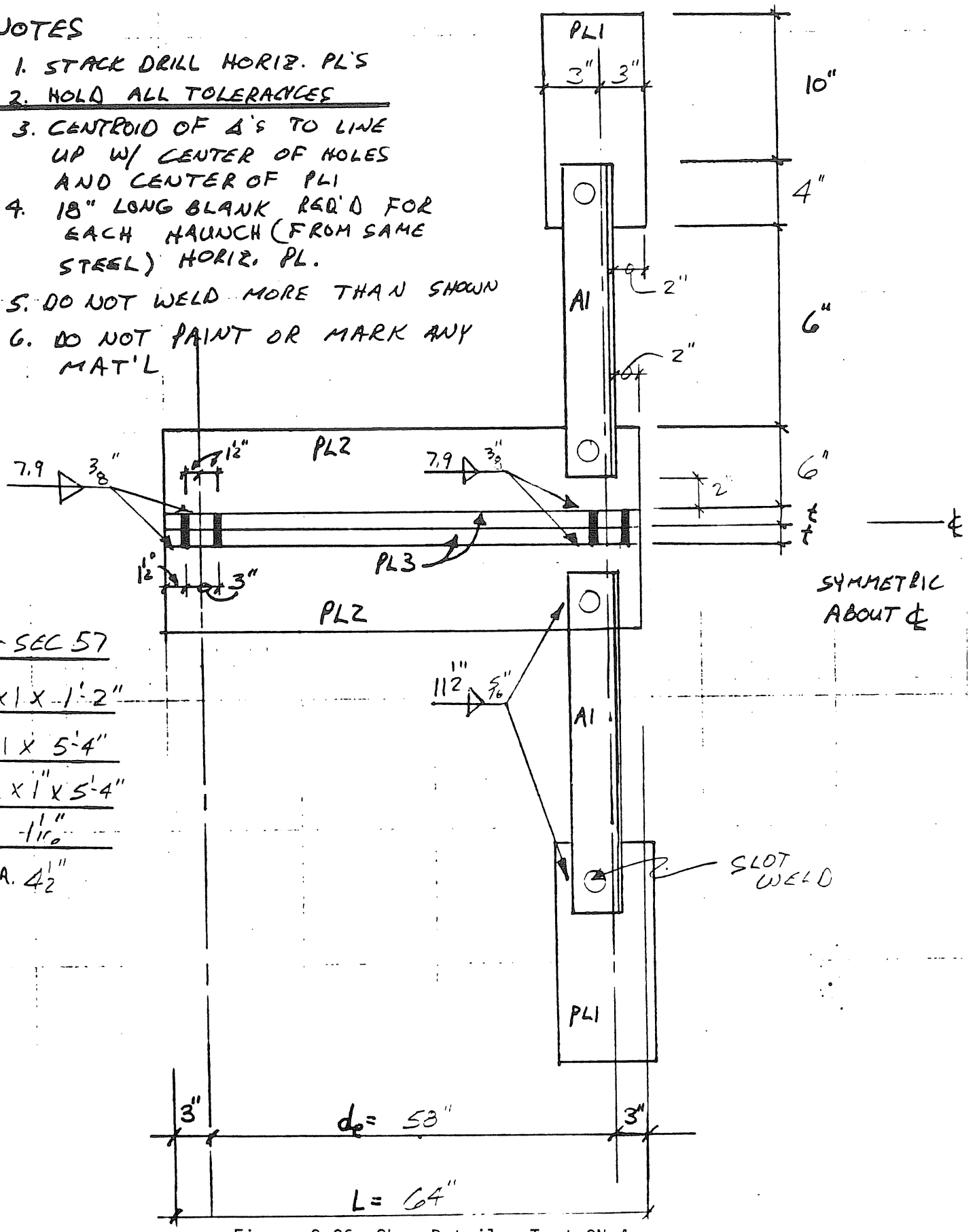

Figure C.36 Shop Details, Test CN-4

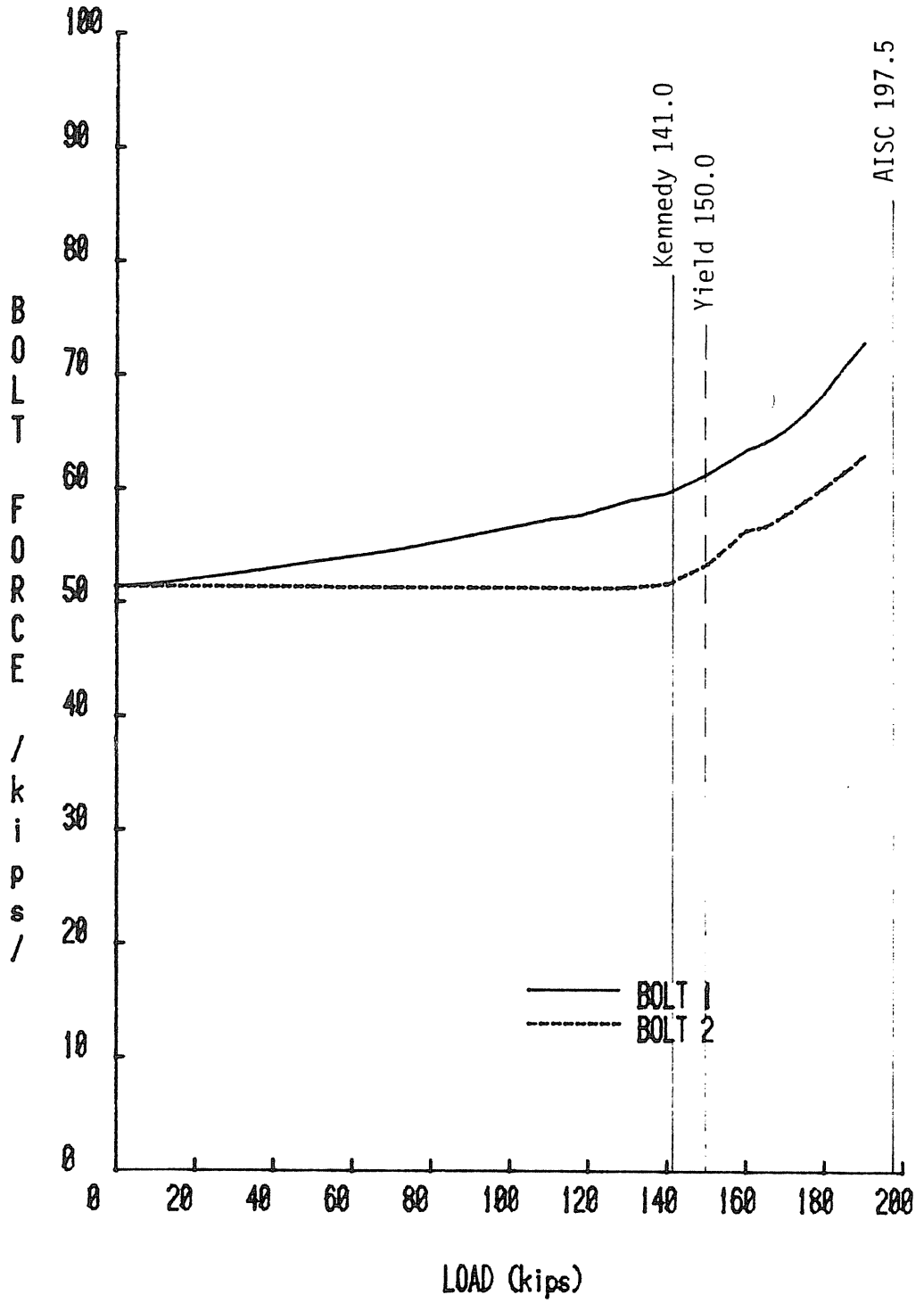

Figure C.37 Load vs. Bolt Force, CN-4

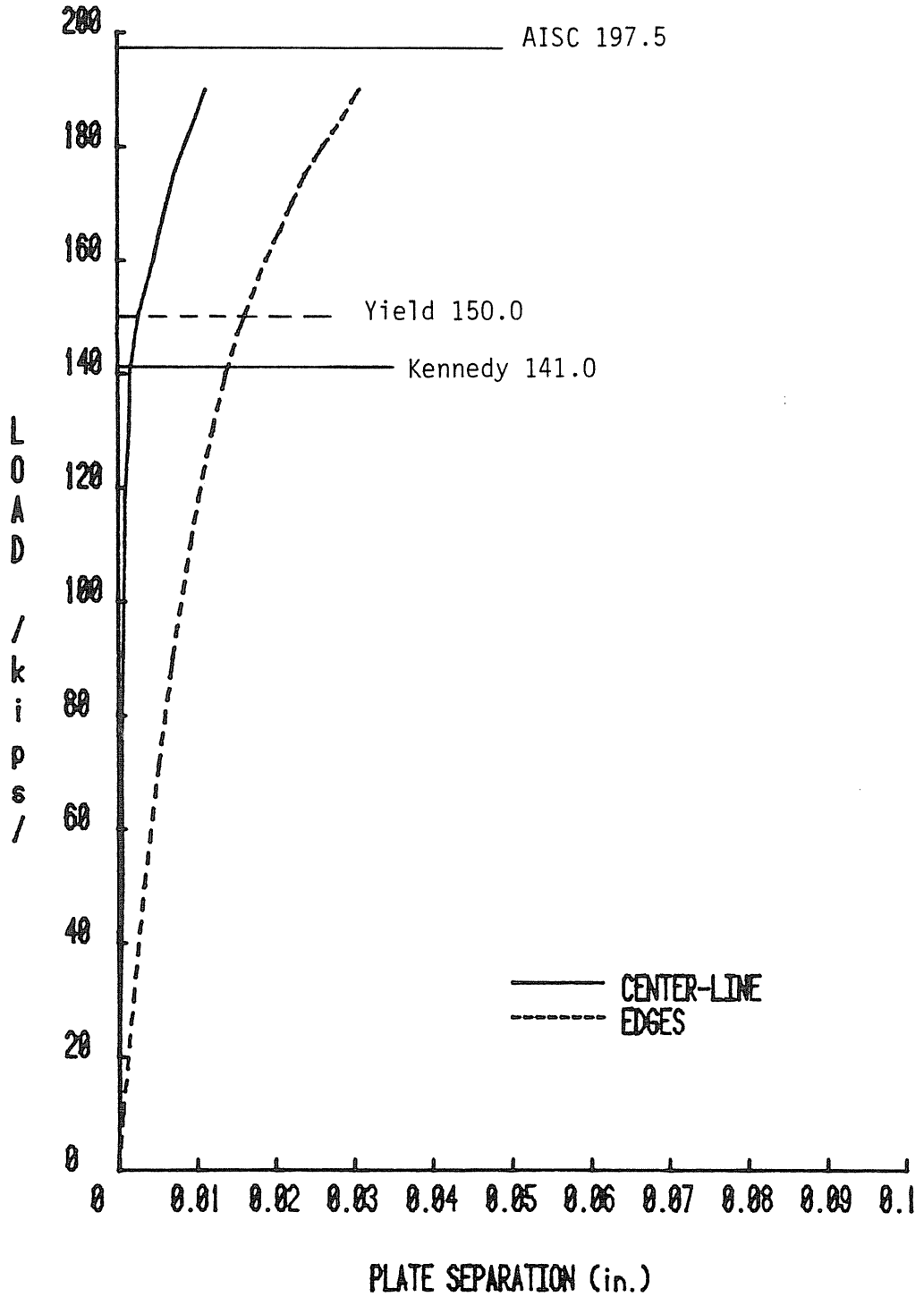

Figure C.38 Load vs. Plate Separation, CN-4

APPENDIX D

KNEE AREA TEST DATA

(KN TEST)

VULCRAFT KNEE CONNECTION TEST SUMMARY

Project: VULCRAFT

Test No.: KN-1

Test Date: 4/27/84

Purpose: Study of Behavior of Knee Area

Knee Area Dimensions: 10.8 in. x 11.88 in.

Knee Diagonal: 2Ls 2x2x0.163 16.05 in.

Splice Plate Dimensions: —

Bolt Diameter: 3/4 No. of Bolts in Tension: 4

Pretension Force per Bolt: 28 kips

Failure Load: 33.3 kips

Failure Mode: Local buckling of both ends of first diagonal member of rafter

Predicted Failure Loads:

Method: VULCRAFT Analysis Load: 20.64x1.66 = 34.26 kips

Method: Load:

Method: Load:

Method: Load:

Maximum Displ. in Load Direction: 1.199 in. @ 33.30 kips

Maximum Plate Separation: 0.006 in. @ 33.30 kips

Discussion:

Observations:

-At 15 kips, some minor yielding was detected at the ends of diagonal member at knee area. Some minor yielding showed around batten angle in compression side of column.

-At 20 kips, some severe yielding was detected on outstanding legs of column angles connected to connection stem. Yielding also was detected at the ends of angles of first member of rafter.

-At 29.5 kips, severe yielding at the ends of first diagonal member of rafter.

-At 33.0 kips, severe yielding of first diagonal in rafter and diagonal of knee.

-At 33.3 kips, local buckling at both ends of first diagonal in rafter.

Loading and Deformations:

-Maximum applied load was 33.3 kips.

-Maximum bolt force was 28.9 kips in west bolt.

-Maximum lateral displacement of knee corner was 0.092 in. to the west.

-Maximum axial strain in rafter first diagonal member (i.e. #33, failed member) was 0.001594 in./in. at ram load of 23.3 kips.

-Maximum axial strain in rafter B.C., member #18, was 0.000847 in./in. at ram load of 32.3 kips.

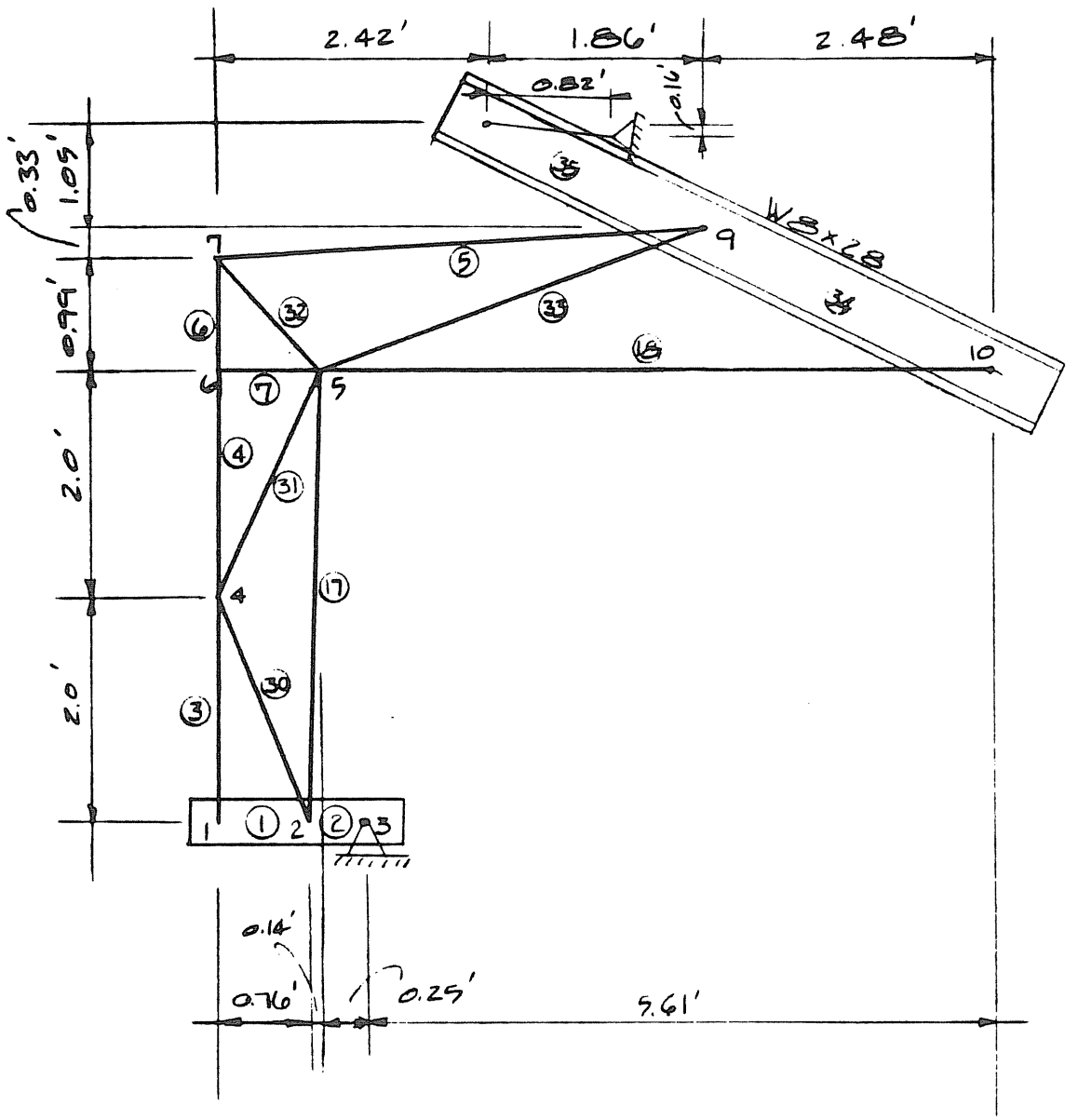

Figure D.1 Specimen Geometry, Test KN-1

Test KN-1
==========

Given:
---

tf=0.500 in.	(Thickness of flange in tee hanger)
a =1.750 in.	(Distance from bolt center to edge)
b =1.250 in.	(Distance from bolt center to web)
p =3.000 in.	(Width of tee hanger per bolt line)
Fy=50.00 ksi	(Yield stress of tee hanger plate)
Bolt type=A325	(Type of bolt. A325 or A490)
db=0.750 in.	(Diameter of Bolt)
B =38.88 kips.	(Ultimate capacity of bolt)
Fyb=88.00 kips.	(Yield stress of threaded bolt)
Ptb=27.21 kips.	(Pretension force in bolt=0.70 x B)

Solution:

According to the method outlined in Chapter 4 of the AISC Manual, the results are:

Service load capacity = 37.05 kips.
======

Service load capacity times 2.0= 74.11 kips.
======

Predicted failure mode is plate yielding

Predicted bolt force at factored load= 27.21 kips
======

According to the method outlined in THE SPLIT-TEE ANALOGY IN BOLTED SPLICES AND BEAM-COLUMN CONNECTIONS, by Kennedy et al published in Joints in Structural Steelwork, John Wiley & Sons, NY ,1981, pp.2.138-2.157, the results are:

Elastic load capacity = 29.56 kips
======

Ultimate load capacity = 59.20 kips
======

Predicted failure mode is plate yielding

Predicted bolt force at factored load= 27.21 kips
======

Figure D.2 AISC and Kennedy Analyses, Test KN-1

```
*************************************************************
                    STIFFNESS ANALYSIS
                         ØF
                     PLANE FRAMES
*************************************************************
```

JOB NAME: VULCRAFT KN-1 FRAME, (WORKING LOAD=20.24)

**** JOINT COORDINATES ****

JOINT	X-COORD (FT.)	Y-COORD (FT.)
1	0.000	0.000
2	0.760	0.000
3	1.150	0.000
4	0.000	2.000
5	0.900	4.000
6	0.000	4.000
7	0.000	4.990
8	2.340	6.450
9	4.280	5.320
10	6.760	4.000
11	3.240	6.210

**** SUPPORT CONDITIONS ****

SUPPORT	X-DIR.	Y-DIR.	Z-DIR.
3	1	1	0
11	1	1	0

**** MEMBER INCIDENCES ****

MEMBER	I JOINT	J JOINT
1	1	2
2	2	3
3	1	4
4	4	6
5	7	9
6	6	7
7	5	6
17	2	5
18	5	10
30	2	4
31	4	5
32	5	7
33	5	9
34	9	10
35	8	9
36	8	11

Figure D.3 Stiffness Analysis, Test KN-1

**** MEMBER PROPERTIES ****

MEMBER	AREA (IN^2)	INERTIA (IN^4)	ELASTICITY (K/IN^2)
1	6.00	18.00	29000.0
2	6.00	18.00	29000.0
3	1.06	0.41	29000.0
4	1.06	0.41	29000.0
5	1.89	1.14	29000.0
6	1.06	0.41	29000.0
7	18.00	147.50	29000.0
17	1.89	1.14	29000.0
18	1.43	0.54	29000.0
30	0.75	0.16	29000.0
31	0.75	0.16	29000.0
32	1.25	0.48	29000.0
33	2.37	1.41	29000.0
34	8.25	98.00	29000.0
35	8.25	98.00	29000.0
36	100.00	0.00	29000.0

**** LOADING 1 **** DL+LL

** JOINT LOADS **

JOINT	FORCE X (K)	FORCE Y (K)	MOMENT Z (FT-K)
1	0.00	0.00	0.00
2	0.00	0.00	0.00
3	0.00	0.00	0.00
4	0.00	0.00	0.00
5	0.00	0.00	0.00
6	0.00	0.00	0.00
7	0.00	0.00	0.00
8	-3.74	-20.30	0.00
9	0.00	0.00	0.00
10	0.00	0.00	0.00
11	0.00	0.00	0.00

Figure D.3 Stiffness Analysis, Test KN-1, Continued

```
************************
* RESULTS OF ANALYSIS *
************************
```

JOB NAME: VULCRAFT KN-1 FRAME, (WORKING LOAD=20.24) LOADING 1

***** JOINT DISPLACEMENTS *****

JOINT	X-DIR. (IN)	Y-DIR. (IN)	Z-DIR. (RAD)
1	-0.0001	-0.0675	0.0043
2	-0.0001	-0.0255	0.0052
3	0.0000	0.0000	0.0056
4	-0.1095	-0.0593	0.0035
5	-0.1416	-0.0524	-0.0009
6	-0.1416	-0.0427	-0.0009
7	-0.1076	-0.0356	-0.0048
8	-0.1021	-0.3627	0.0032
9	-0.0705	-0.3270	0.0007
10	-0.0917	-0.3590	-0.0021
11	0.0000	0.0000	0.0516

***** REACTIONS *****

JOINT	FORCE X (K)	FORCE Y (K)	MOMENT Z (FT-K)
3	3.744	20.297	0.000
11	-0.004	0.003	0.000

Figure D.3 Stiffness Analysis, Test KN-1, Continued

***** MEMBER END ACTIONS -- LOCAL COORDINATES *****

MEMBER	JOINT	AXIAL (K)	SHEAR (K)	MOMENT (FT-K)
1	1	-0.16	10.47	0.13
	2	0.16	-10.47	7.83
2	2	-3.74	-20.30	-7.92
	3	3.74	20.30	0.00
3	1	-10.47	-0.16	-0.13
	4	10.47	0.16	-0.20
4	4	-21.30	-0.01	0.17
	6	21.30	0.01	-0.19
5	7	-15.56	0.55	0.87
	9	15.56	-0.55	1.47
6	6	-18.34	0.01	0.33
	7	18.34	-0.01	-0.33
7	5	0.02	-2.96	-2.52
	6	-0.02	2.96	-0.14
17	2	36.46	-0.14	0.07
	5	-36.46	0.14	-0.63
18	5	-29.55	0.11	0.34
	10	29.55	-0.11	0.30
30	2	-6.07	-0.01	0.01
	4	6.07	0.01	-0.04
31	4	5.65	0.00	0.07
	5	-5.65	0.00	-0.06
32	5	23.55	-0.39	0.02
	7	-23.55	0.39	-0.55
33	5	53.08	1.64	2.85
	9	-53.08	-1.64	3.11
34	9	26.13	13.79	39.03
	10	-26.13	-13.79	-0.30
35	8	6.98	-19.42	0.00
	9	-6.98	19.42	-43.61
36	8	0.01	0.00	0.20
	11	-0.01	0.00	0.00

Figure D.3 Stiffness Analysis, Test KN-1, Continued

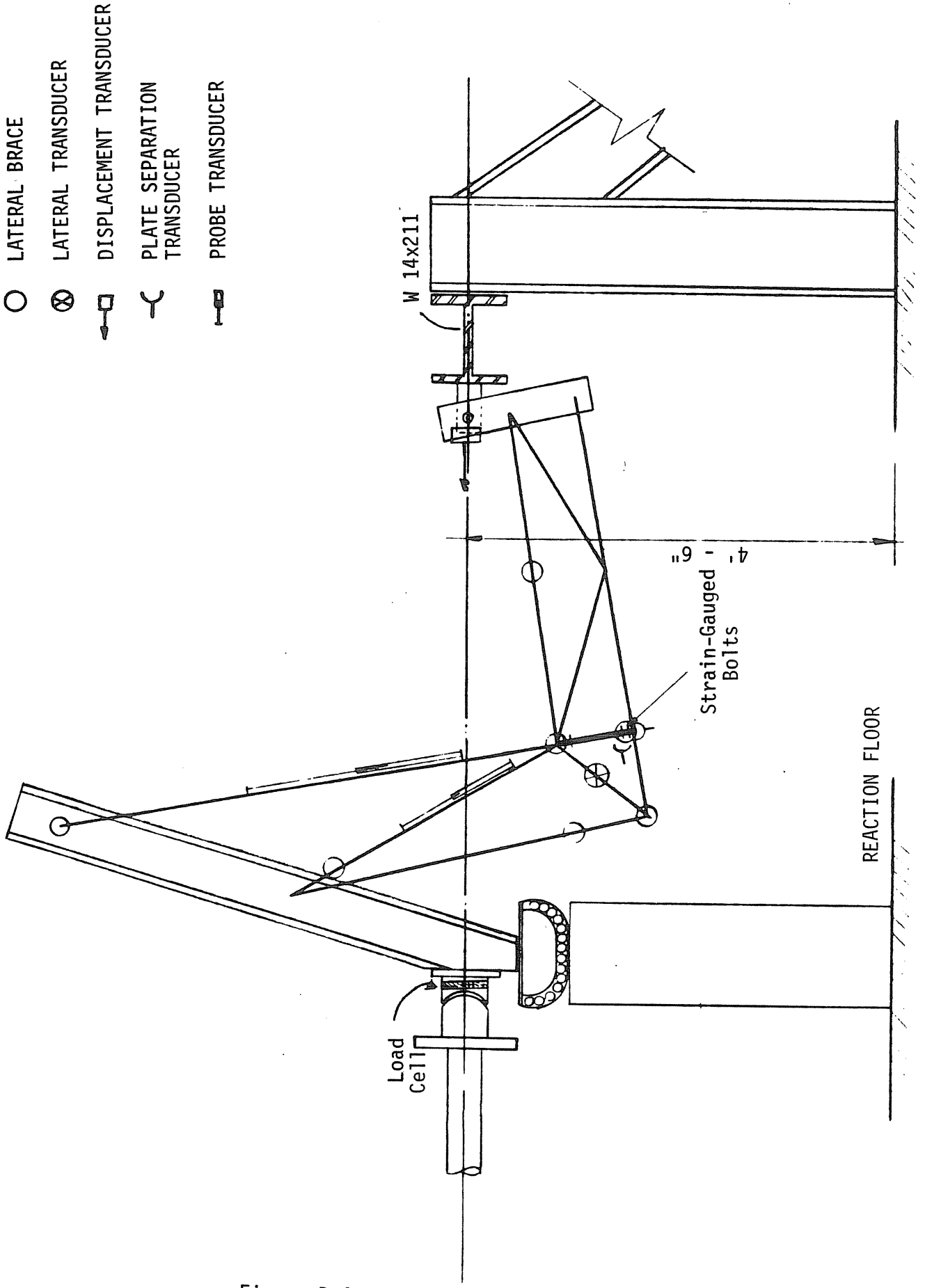

Figure D.4 Test Setup, Test KN-1

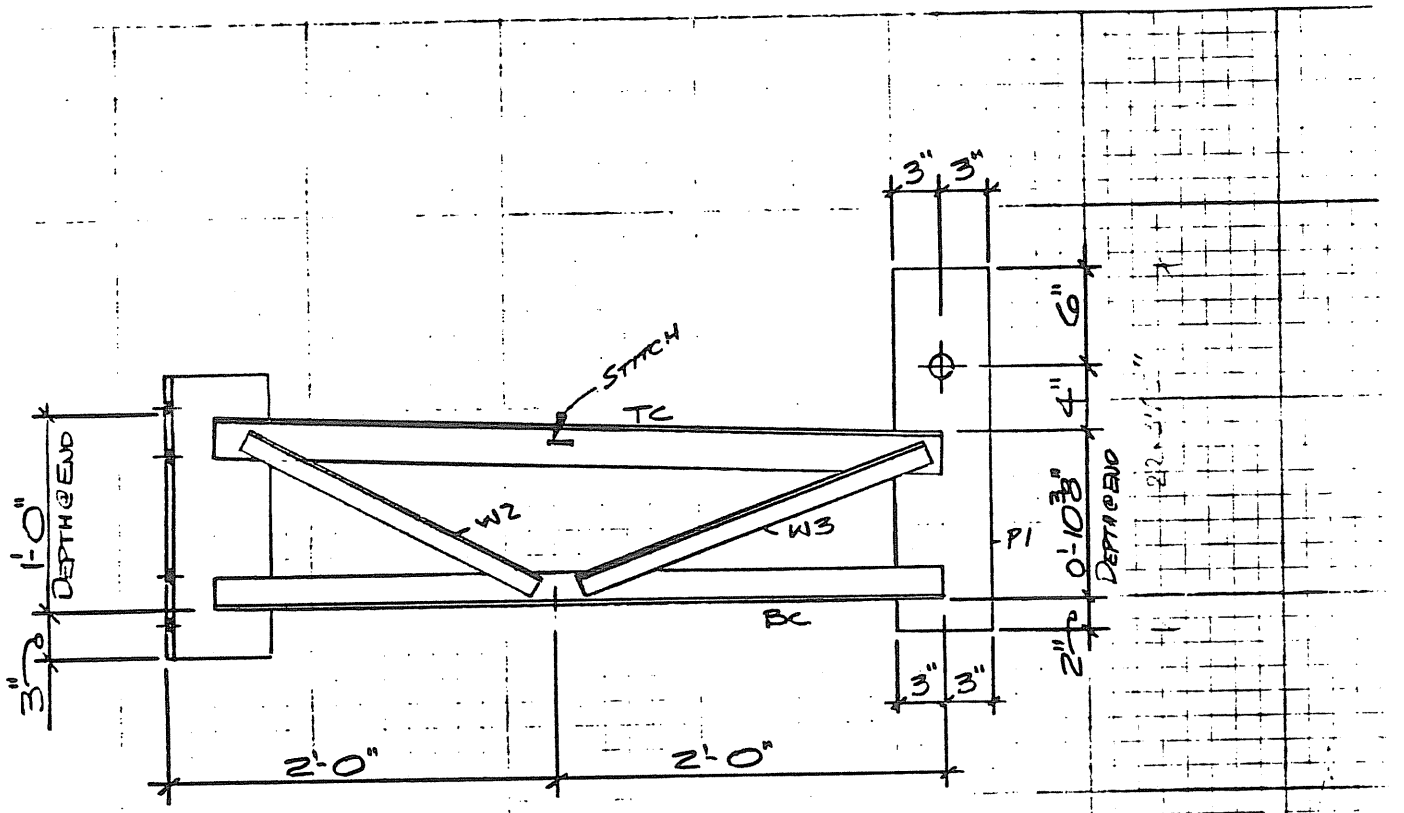

2- TC - SEC. 33 - 3'-9" WELD 14.9"
2- BC - SEC 22 - 3'-9" WELD 10.8" @ HAUNCH & 4.2" @ P1

2- W2 - SEC 16 - 1'-8 1/4" - WELD 6.0"
2- W3 - SEC 16 - 1'-10 3/4" - WELD 3.8"

1- P1 - 6x1" R - 1'-10 3/8" WITH 1 9/16" Ø (DRILLED IN)

Figure D.5 Shop Details, Test KN-1,

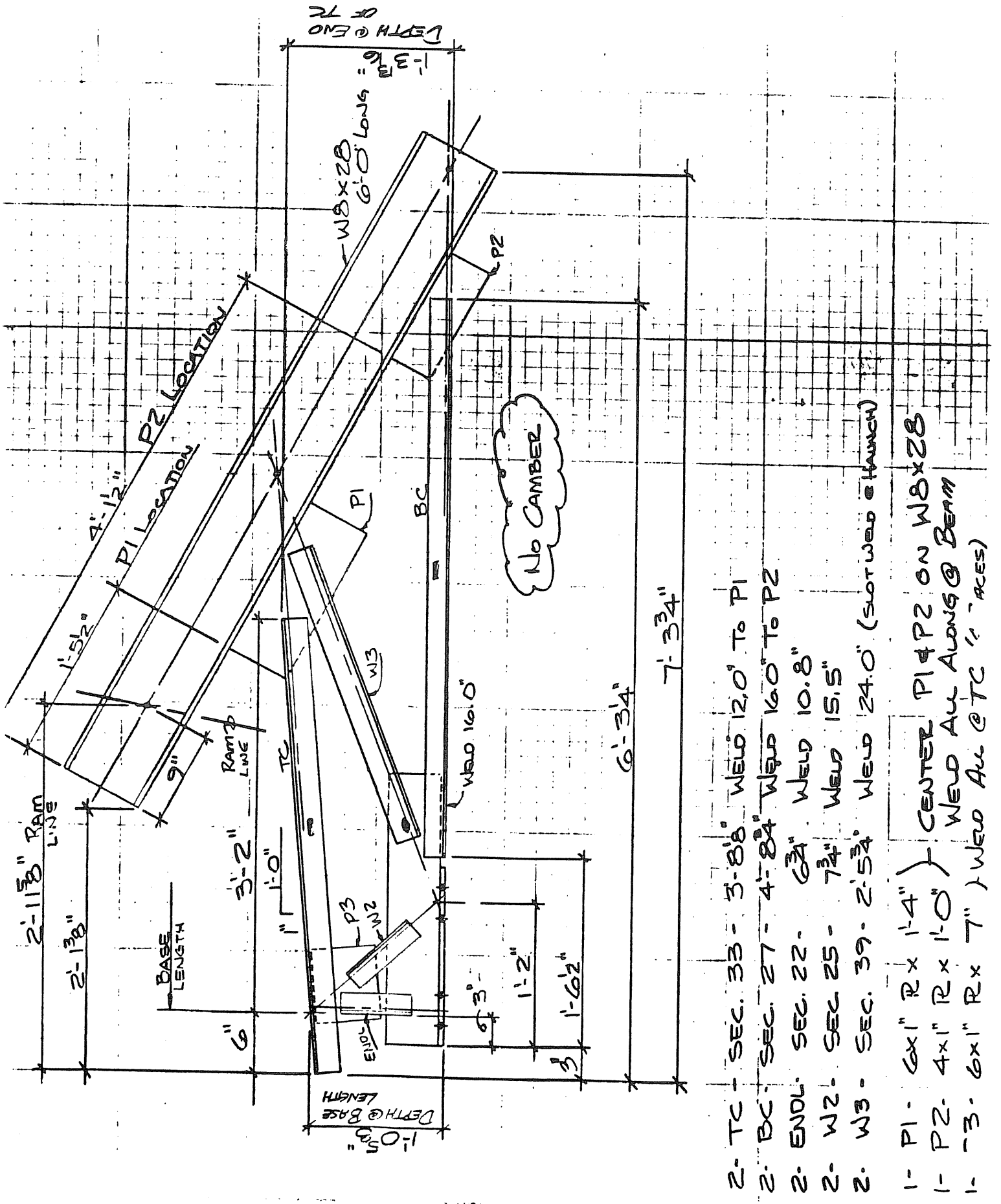

Figure D.5 Shop Details, Test KN-1, Continued

HOLE SIZE 13/16" Ø
3½" GAGE

BOLT SIZE ¾" x 2¼ A325

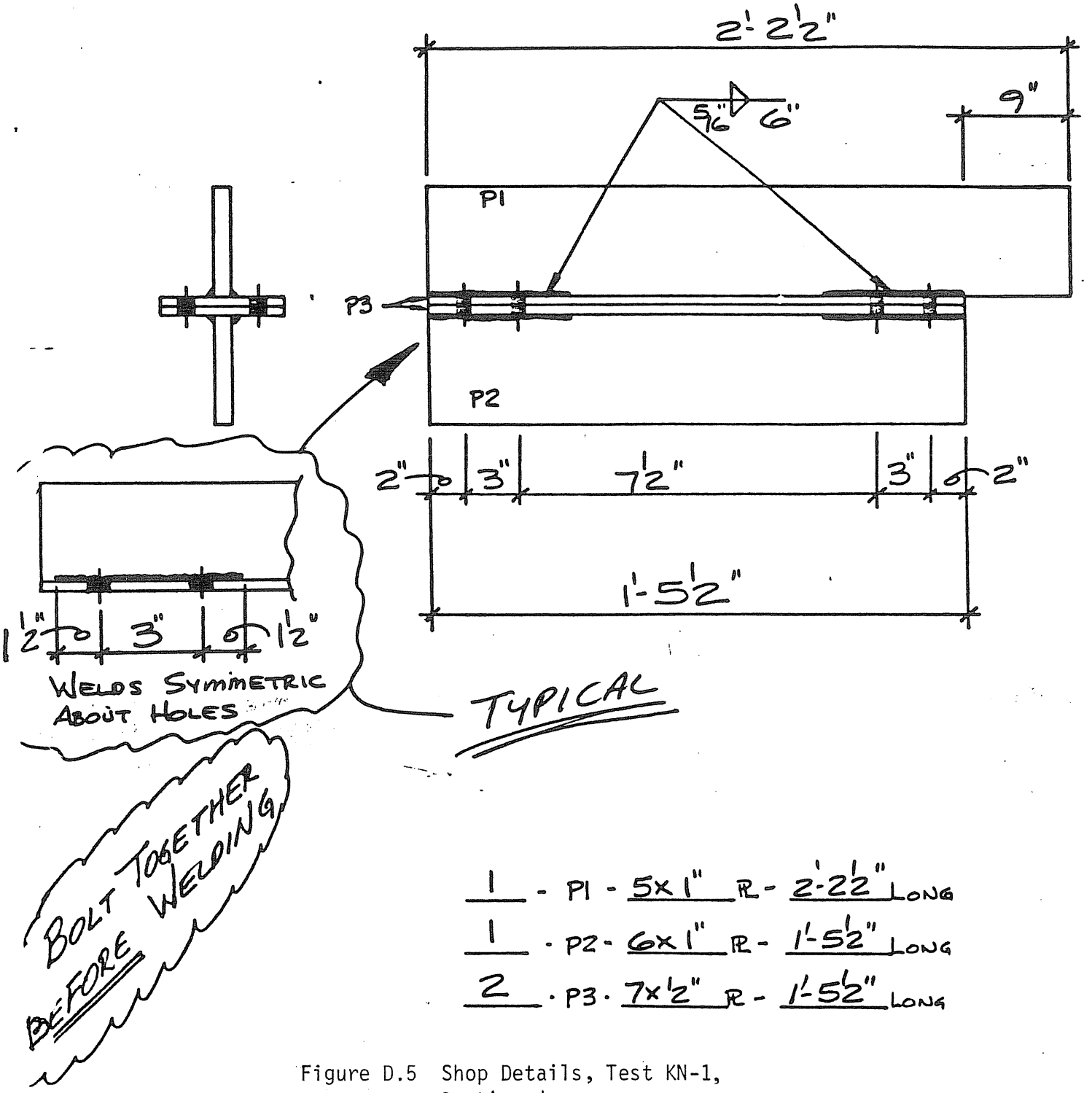

1 - P1 - 5x1" R - 2'-2½" LONG
1 - P2 - 6x1" R - 1'-5½" LONG
2 - P3 - 7x½" R - 1'-5½" LONG

Figure D.5 Shop Details, Test KN-1, Continued

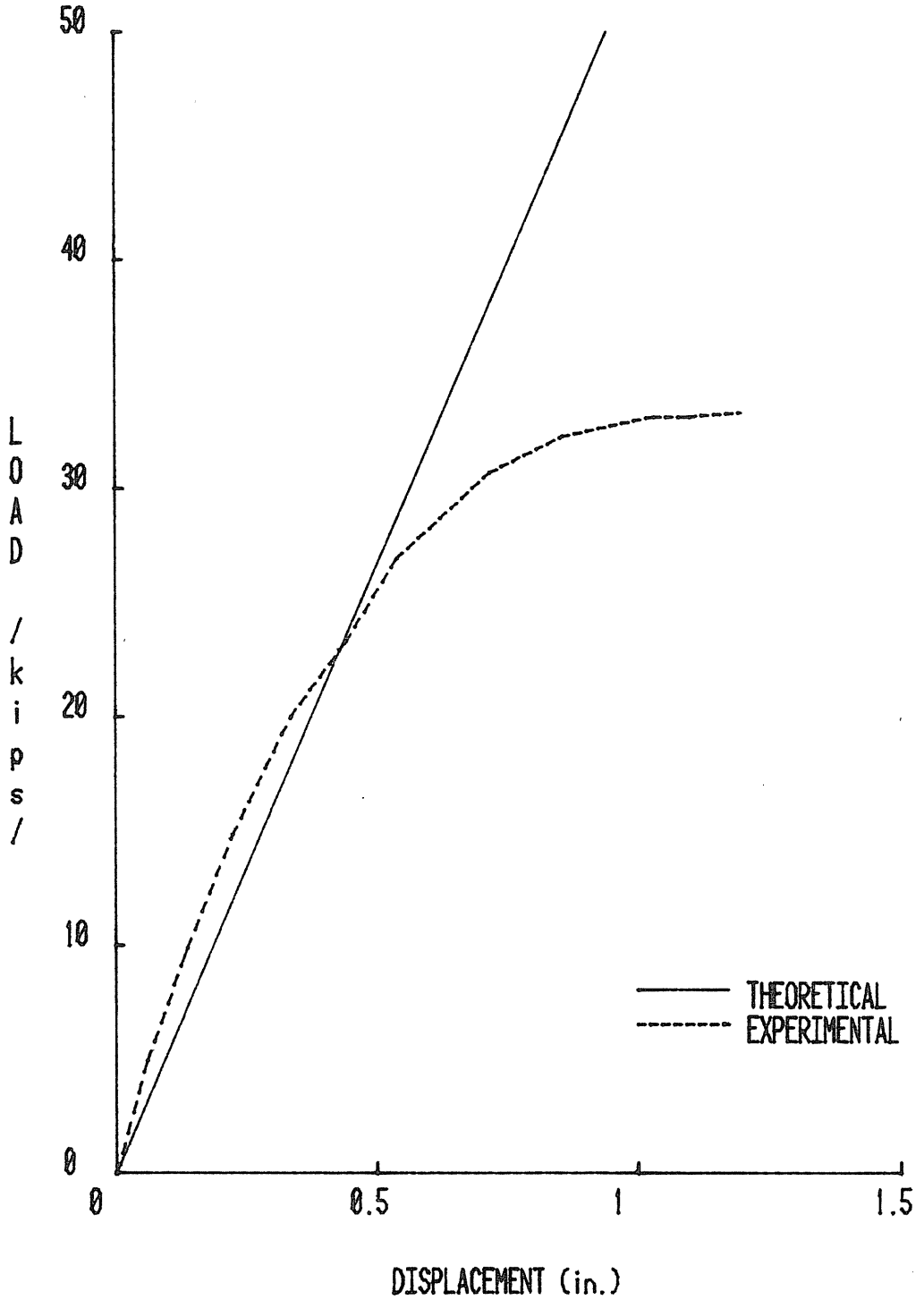

Figure D.6 Load vs. Displ. in Load Direction, KN-1

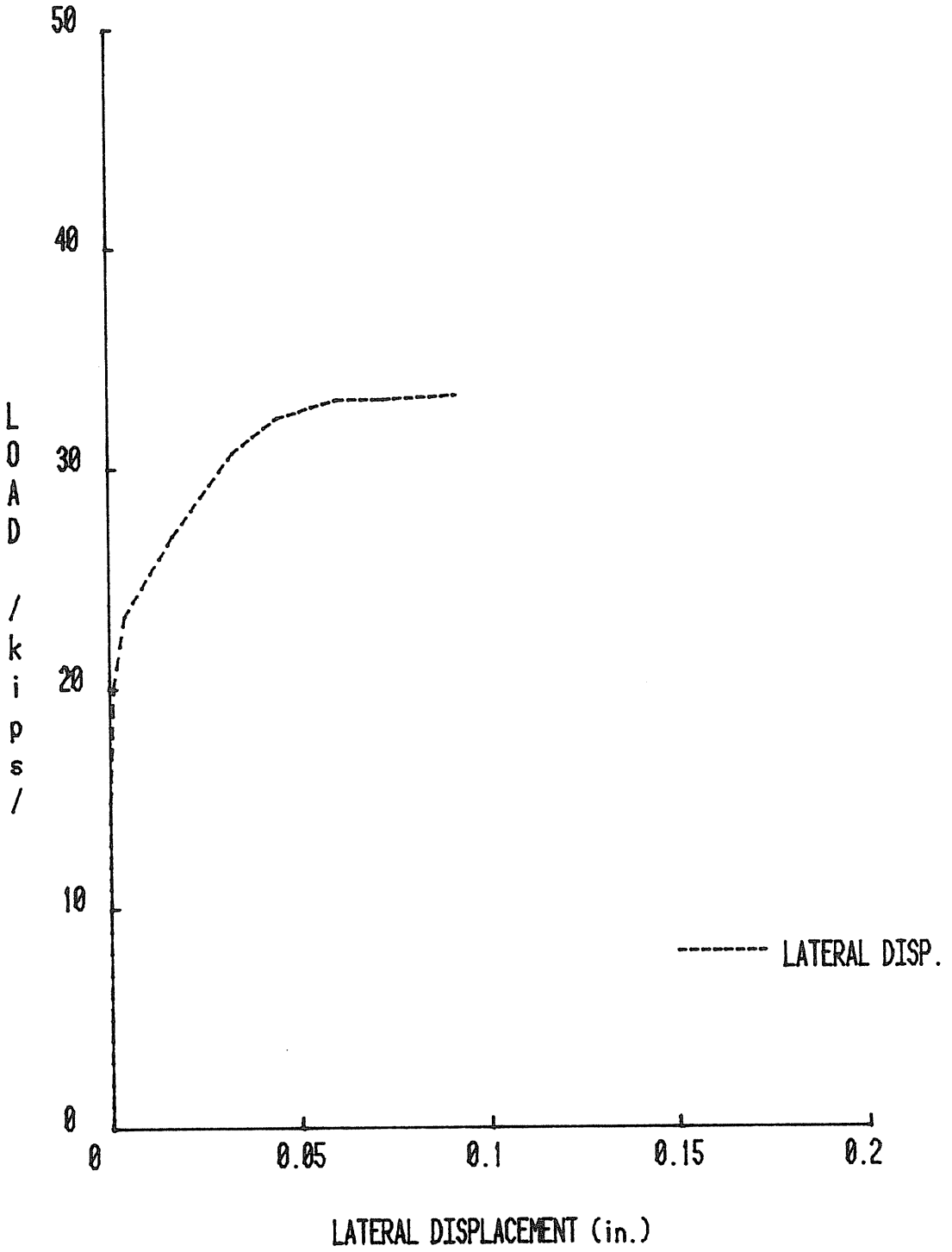

Figure D.7 Load vs. Lateral Displacement, KN-1

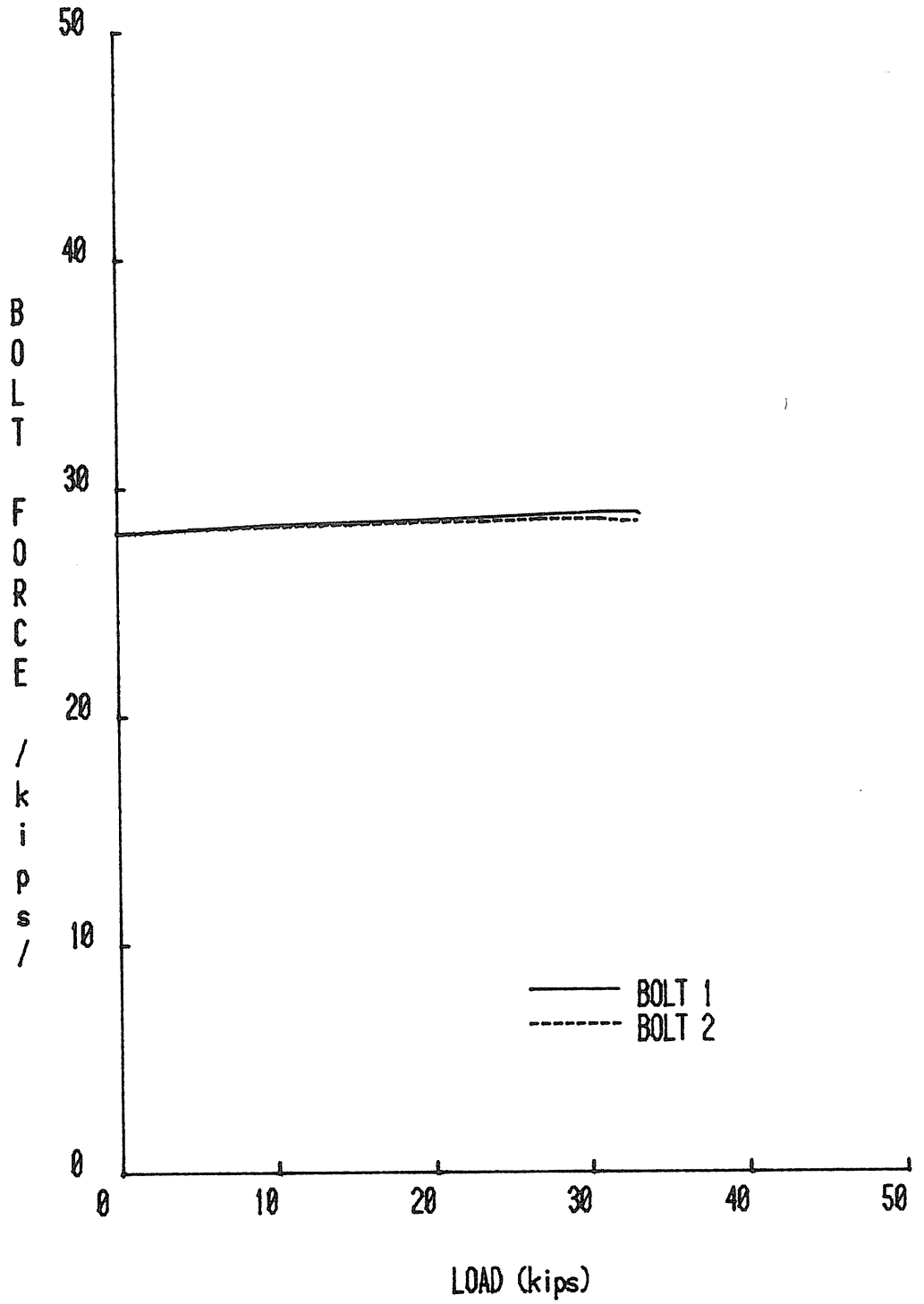

Figure D.8 Bolt Force vs. Load, KN-1

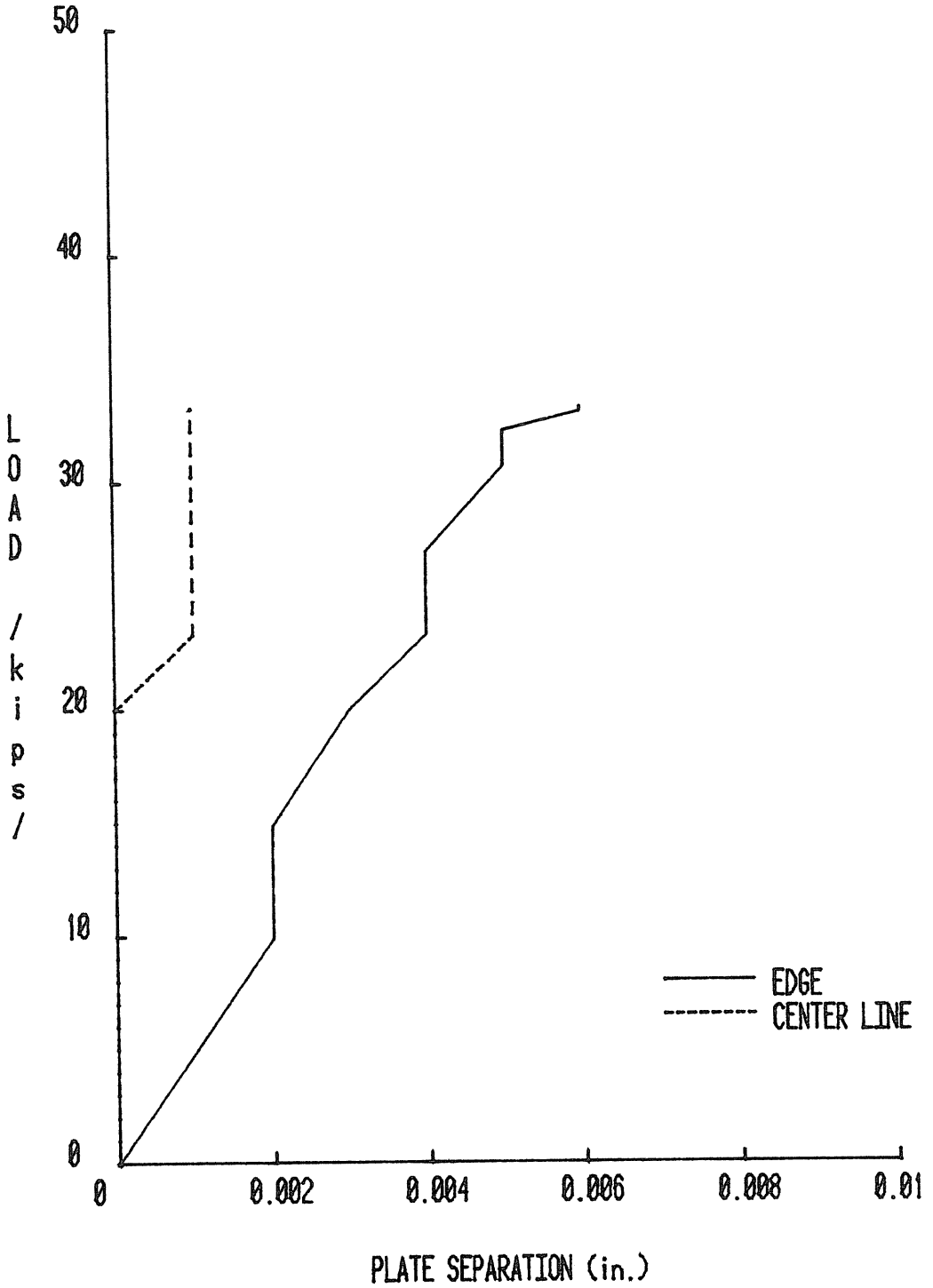

Figure D.9 Load vs. Plate Separation, KN-1

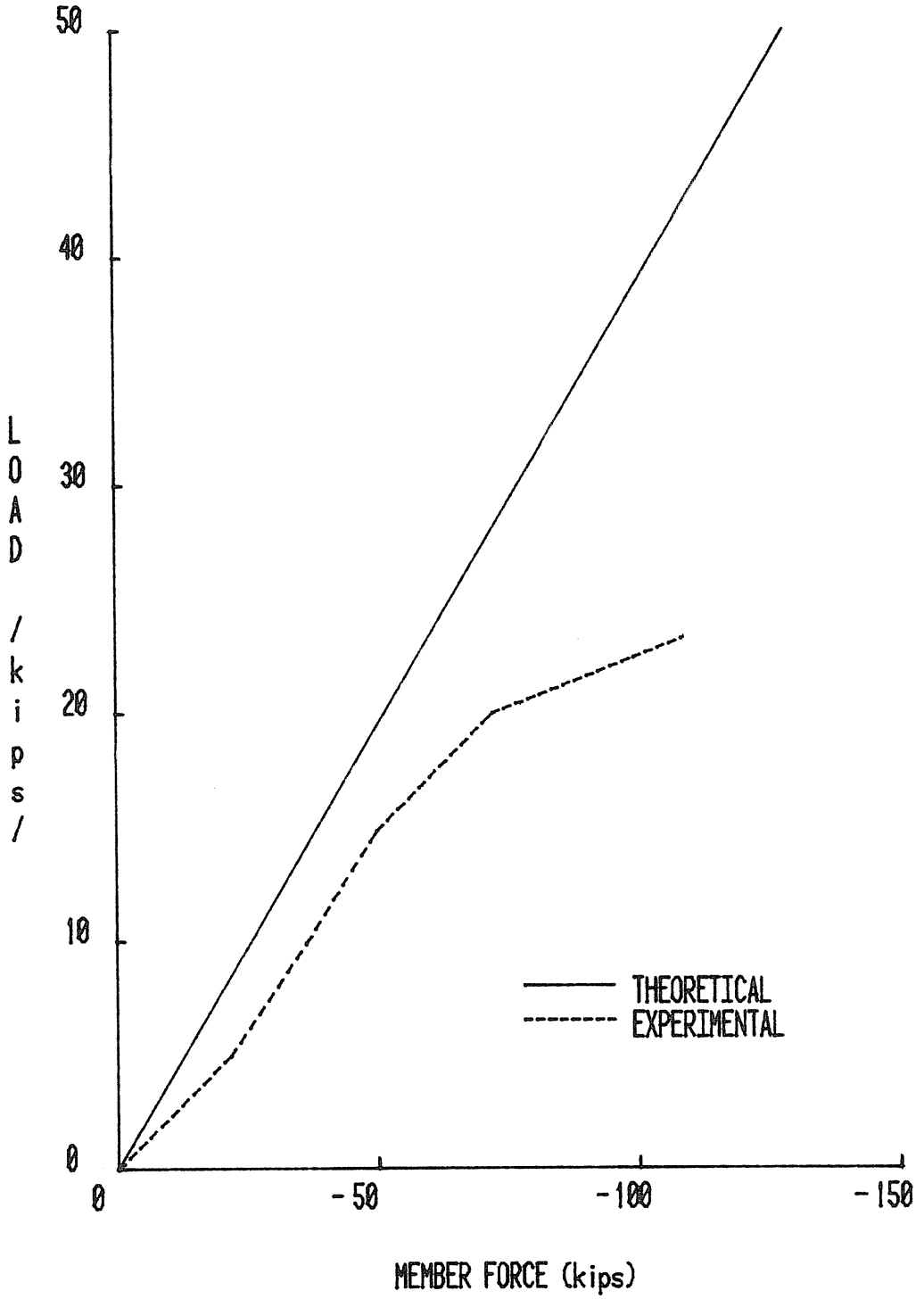

Figure D.10 Load vs. Member (#33) Force, KN-1

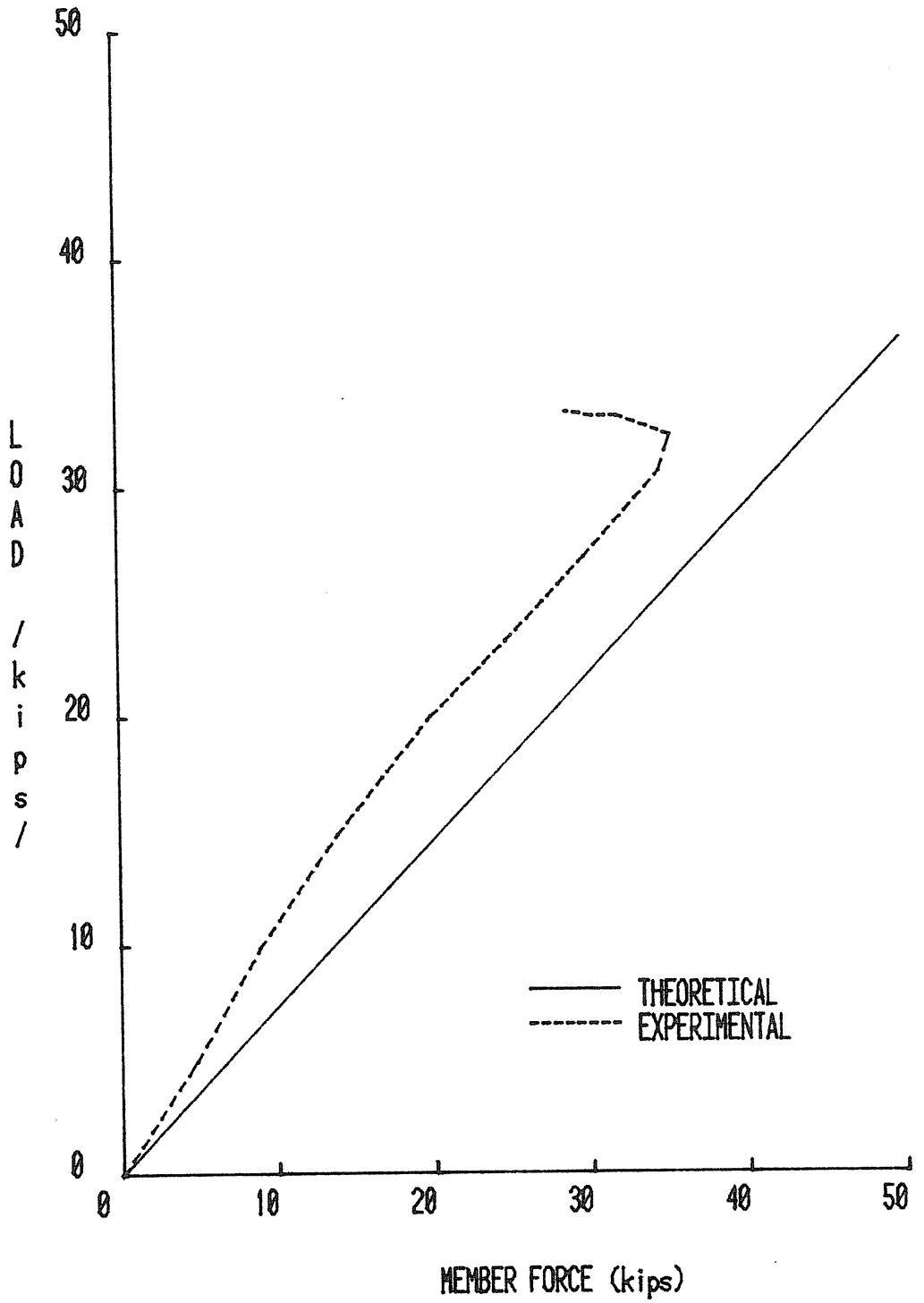

Figure D.11 Load vs. Member (#18) Force, KN-1

VULCRAFT KNEE CONNECTION TEST SUMMARY

Project: VULCRAFT

Test No.: KN-2

Test Date: 4/25/84

Purpose: Study of Behavior of Knee Area

Knee Area Dimensions: 22.80 in. x 24.12 in.

Knee Diagonal: 2Ls 2x2x14.8 33.19 in.

Splice Plate Dimensions: ——

Bolt Diameter: 3/4 in. No. of Bolts in Tension: 4

Pretension Force per Bolt: 28 kips

Failure Load: 36 kips

Failure Mode: Weld failure and buckling of first diagonal on rafter (member #43)

Predicted Failure Loads:

Method: Vulcraft Analysis Load: 17.36x1.66 = 28.82 kips

Method: Load:

Method: Load:

Method: Load:

Maximum Displ. in Load Direction: 1.195 in. @ 36 kips

Maximum Plate Separation: 0.001 in. @ 36 kips

Discussion:

Observations:

-At 15.0 kips, yielding was detected around joints of column.

-At working load (17.36 kips) some yielding was detected on column compression leg.

-At 22 kips, yielding started on the I-beam flanges and web.

-At 30 kips, yielding detected on first diagonal in rafter at weld locations.

-At 30 kips, specimen was free from the vertical support on ram side.

-At 31.5 kips, severe yielding in the first diagonal of rafter (member #43)

-At 36 kips crack was visible on weld connecting back-to-back leg of member #43 to gusset plate.

Loading and Deformations:

-Maximum applied load was 36 kips.

-Maximum bolt force was 28.6 kips in east side bolt.

-Maximum lateral displacement of knee corner was .04 in. to the west.

-Maximum axial strain in diagonal member (#42) was 0.00062 in./in. and in first diagonal of rafter (#43) was .00065 in./in. at ram load of 20 kips.

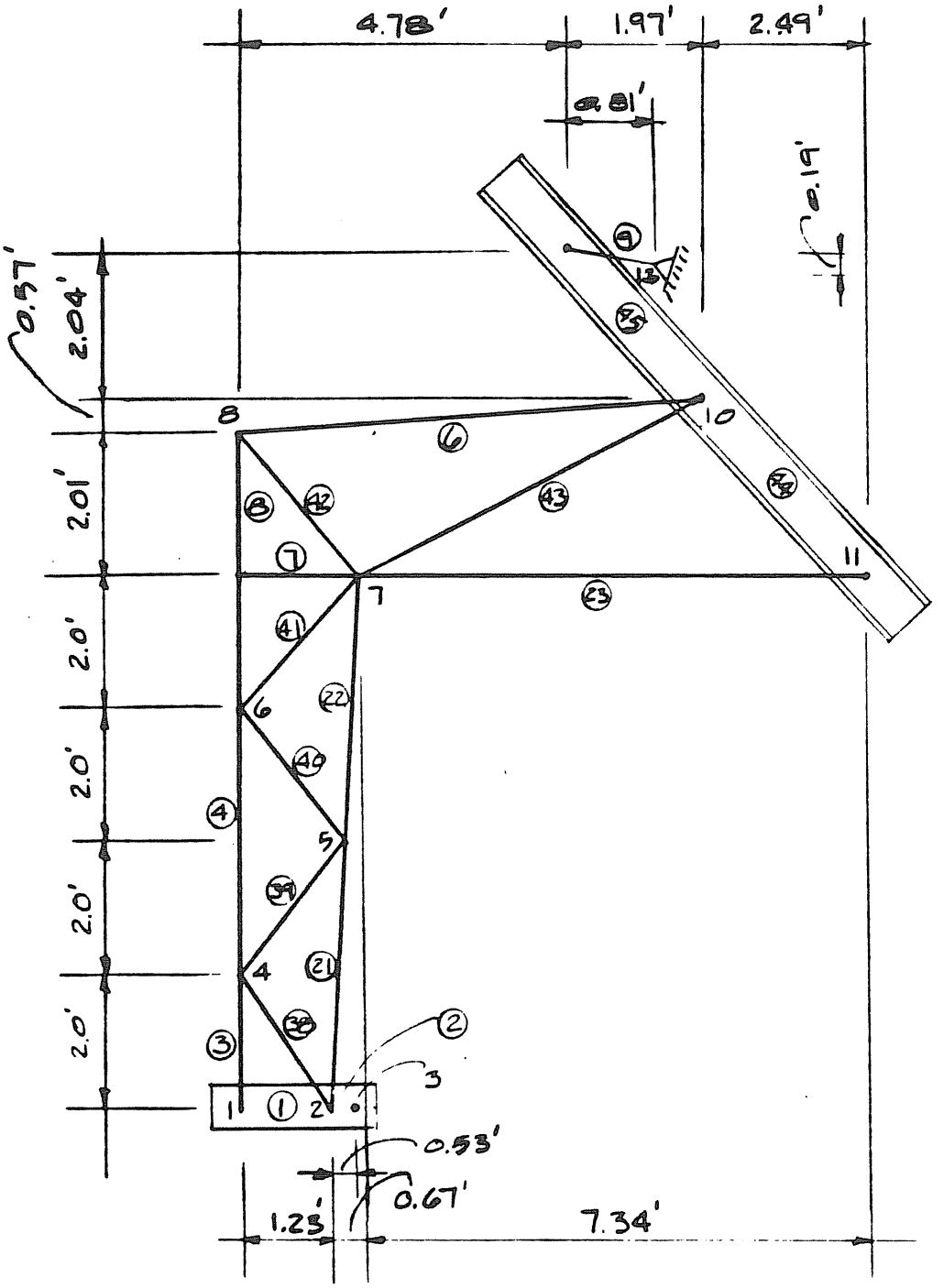

Figure D.12 Specimen Geometry, Test KN-2

Test KN-2
=========

Given:
---

tf=0.500 in.	(Thickness of flange in tee hanger)
a =1.750 in.	(Distance from bolt center to edge)
b =1.250 in.	(Distance from bolt center to web)
p =3.000 in.	(Width of tee hanger per bolt line)
Fy=50.00 ksi	(Yield stress of tee hanger plate)
Bolt type=A325	(Type of bolt. A325 or A490)
db=0.750 in.	(Diameter of Bolt)
B =38.88 kips.	(Ultimate capacity of bolt)
Fyb=88.00 kips.	(Yield stress of threaded bolt)
Ptb=27.21 kips.	(Pretension force in bolt=0.70 x B)

Solution:

According to the method outlined in Chapter 4 of the AISC Manual, the results are:

Service load capacity = 37.05 kips.
======

Service load capacity times 2.0= 74.11 kips.
======

Predicted failure mode is plate yielding

Predicted bolt force at factored load= 27.21 kips
======

According to the method outlined in THE SPLIT-TEE ANALOGY IN BOLTED SPLICES AND BEAM-COLUMN CONNECTIONS, by Kennedy et al published in Joints in Structural Steelwork, John Wiley & Sons, NY ,1981, pp.2.138-2.157, the results are:

Elastic load capacity = 29.56 kips
======

Ultimate load capacity = 59.20 kips
======

Predicted failure mode is plate yielding

Predicted bolt force at factored load= 27.21 kips
======

Figure D.13 AISC and Kennedy Analyses, Test KN-2

JOB NAME: VULCRAFT KN-2 FRAME, WORKING LOAD=17.36 KIPS

**** JOINT COORDINATES ****

JOINT	X-COORD (FT.)	Y-COORD (FT.)
1	0.000	0.000
2	1.230	0.000
3	1.760	0.000
4	0.000	2.000
5	1.570	4.000
6	0.000	6.000
7	1.900	8.000
8	0.000	8.000
9	0.000	10.010
10	4.780	12.620
11	6.750	10.580
12	9.240	8.000
13	5.590	12.430

**** SUPPORT CONDITIONS ****

SUPPORT	X-DIR.	Y-DIR.	Z-DIR.
3	1	1	0
13	1	1	0

**** MEMBER INCIDENCES ****

MEMBER	I JOINT	J JOINT
1	1	2
2	2	3
3	1	4
4	4	6
5	6	8
6	9	11
7	7	8
8	8	9
9	10	13
21	2	5
22	5	7
23	7	12
38	2	4
39	4	5
40	5	6
41	6	7
42	7	9
43	7	11
44	11	12
45	10	11

Figure D.14 Stiffness Analysis, Test KN-2,

**** MEMBER PROPERTIES ****

MEMBER	AREA (IN^2)	INERTIA (IN^4)	ELASTICITY (K/IN^2)
1	6.00	18.00	29000.0
2	6.00	18.00	29000.0
3	1.14	0.44	29000.0
4	1.14	0.44	29000.0
5	1.15	0.44	29000.0
6	1.89	1.14	29000.0
7	19.00	183.60	29000.0
8	1.14	0.44	29000.0
9	100.00	0.00	29000.0
21	1.89	1.14	29000.0
22	1.89	1.14	29000.0
23	1.14	0.44	29000.0
38	0.75	0.16	29000.0
39	0.37	0.08	29000.0
40	0.75	0.16	29000.0
41	0.75	0.16	29000.0
42	1.14	0.44	29000.0
43	2.37	1.41	29000.0
44	8.25	98.00	29000.0
45	8.25	98.00	29000.0

**** LOADING 1 **** DL+LL

** JOINT LOADS **

JOINT	FORCE X (K)	FORCE Y (K)	MOMENT Z (FT-K)
1	0.00	0.00	0.00
2	0.00	0.00	0.00
3	0.00	0.00	0.00
4	0.00	0.00	0.00
5	0.00	0.00	0.00
6	0.00	0.00	0.00
7	0.00	0.00	0.00
8	0.00	0.00	0.00
9	0.00	0.00	0.00
10	-4.04	-16.88	0.00
11	0.00	0.00	0.00
12	0.00	0.00	0.00
13	0.00	0.00	0.00

Figure D.14 Stiffness Analysis, Test KN-2, Continued

```
************************
* RESULTS OF ANALYSIS *
************************
```

JOB NAME: VULCRAFT KN-2 FRAME, WORKING LOAD=17.36 KIPS LOADING 1 DL+LL

***** JOINT DISPLACEMENTS *****

JOINT	X-DIR. (IN)	Y-DIR. (IN)	Z-DIR. (RAD)
1	-0.0002	-0.0799	0.0029
2	-0.0001	-0.0303	0.0043
3	0.0000	0.0000	0.0050
4	-0.0804	-0.0747	0.0030
5	-0.1346	-0.0426	0.0014
6	-0.1585	-0.0570	0.0003
7	-0.1511	-0.0685	-0.0010
8	-0.1511	-0.0458	-0.0010
9	-0.0877	-0.0349	-0.0040
10	-0.0945	-0.4031	0.0032
11	-0.0415	-0.3500	0.0002
12	-0.1103	-0.4137	-0.0034
13	0.0000	0.0000	0.0606

***** REACTIONS *****

JOINT	FORCE X (K)	FORCE Y (K)	MOMENT Z (FT-K)
3	4.030	16.848	0.000
13	0.010	0.032	0.000

Figure D.14 Stiffness Analysis, Test KN-2, Continued

***** MEMBER END ACTIONS -- LOCAL COORDINATES *****

MEMBER	JOINT	AXIAL (K)	SHEAR (K)	MOMENT (FT-K)
1	1	-0.11	7.14	0.11
	2	0.11	-7.14	8.67
2	2	-4.03	-16.85	-8.93
	3	4.03	16.85	0.00
3	1	-7.14	-0.11	-0.11
	4	7.14	0.11	-0.10
4	4	-12.19	0.00	0.07
	6	12.19	0.00	-0.05
5	6	-15.60	-0.01	0.05
	8	15.60	0.01	-0.07
6	9	-13.15	0.12	0.27
	11	13.15	-0.12	0.56
7	7	0.05	-0.69	-1.21
	8	-0.05	0.69	-0.11
8	8	-14.90	0.04	0.17
	9	14.90	-0.04	-0.09
9	10	0.00	-0.03	-0.03
	13	0.00	0.03	0.00
21	2	26.85	0.02	0.21
	5	-26.85	-0.02	-0.12
22	5	31.01	-0.01	0.11
	7	-31.01	0.01	-0.17
23	7	-15.32	0.03	0.15
	12	15.32	-0.03	0.10
38	2	-3.24	0.03	0.05
	4	3.24	-0.03	0.02
39	4	2.89	0.01	0.02
	5	-2.89	-0.01	0.00
40	5	-2.38	0.00	0.01
	6	2.38	0.00	-0.02
41	6	2.12	0.00	0.02
	7	-2.12	0.00	-0.01
42	7	19.10	-0.06	0.02
	9	-19.10	0.06	-0.18
43	7	37.02	0.47	1.22
	11	-37.02	-0.47	1.35
44	11	10.66	11.00	39.54
	12	-10.66	-11.00	-0.10
45	10	9.32	-14.60	0.03
	11	-9.32	14.60	-41.44

Figure D.14 Stiffness Analysis, Test KN-2, Continued

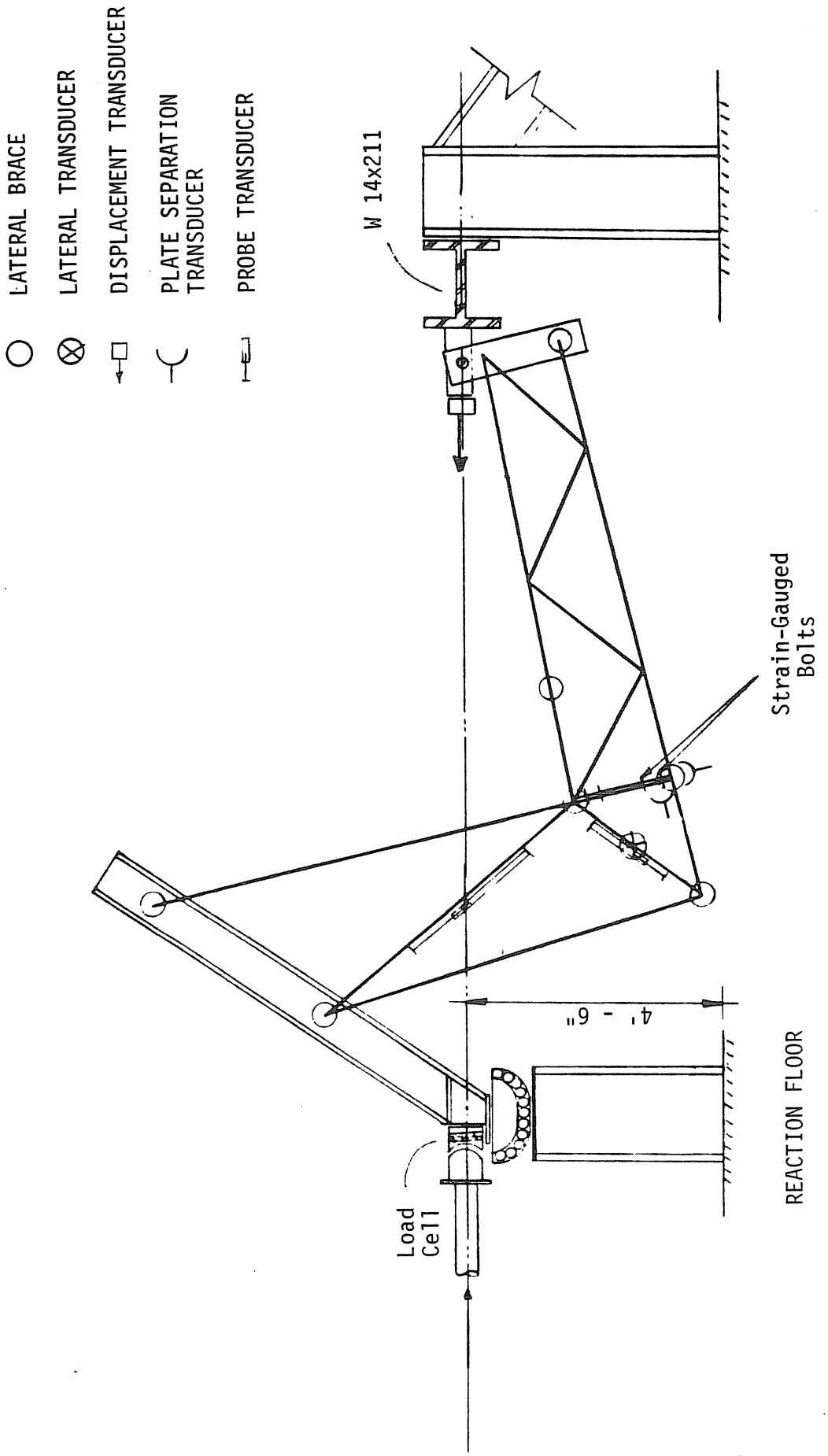

Figure D.15 Test Setup, Test KN-2

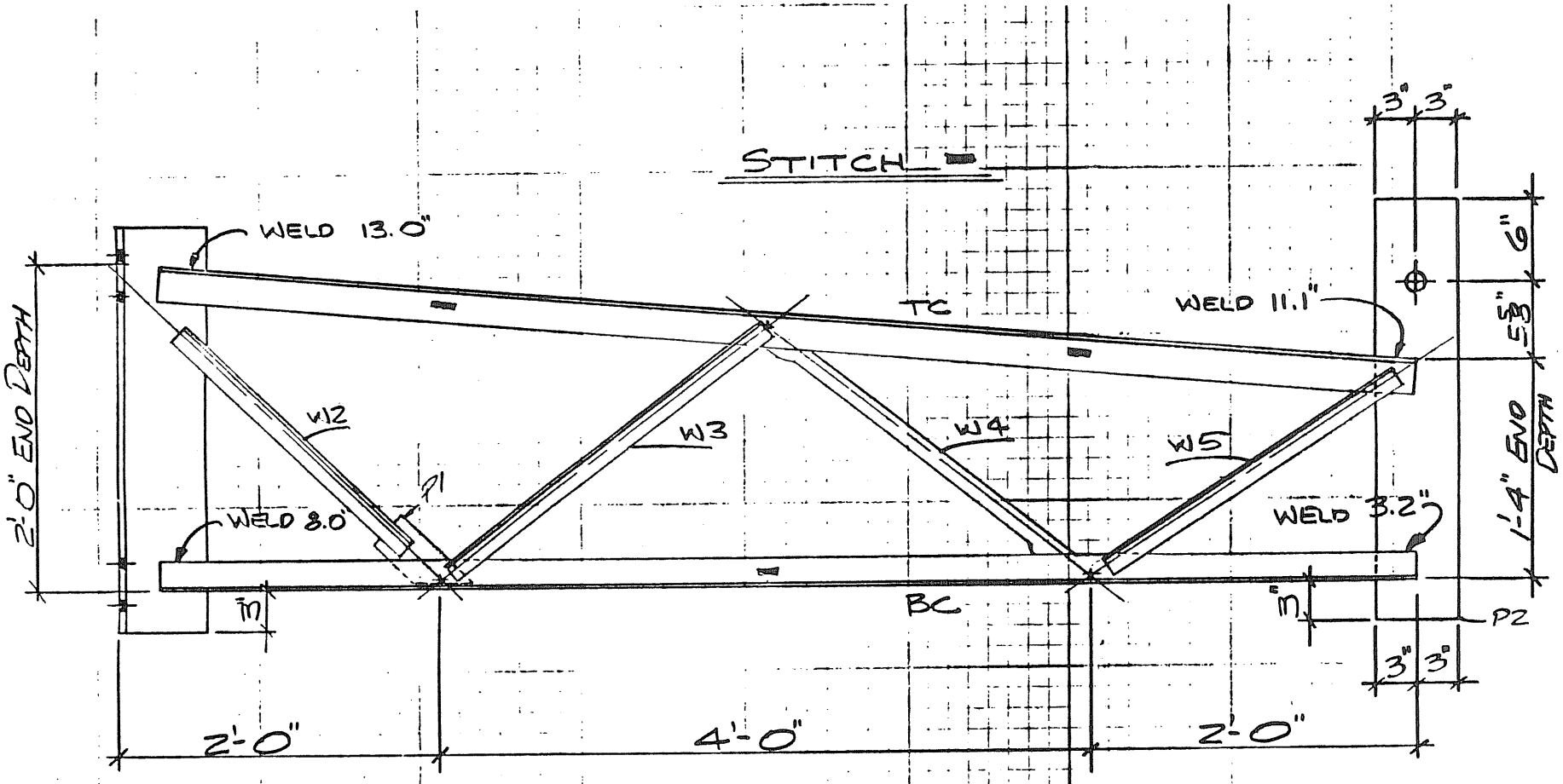

2- TC - SEC. 33 - 7'-9 1/4"
2- BC - SEC. 23 - 7'-9"

2- W2 - SEC. 16 - 1'-11" WELD 6.0"
2- W3 - SEC. 16 - 2'-5" WELD 3.0"
1- W4 - SEC. 16 - 2'-5 1/2" WELD 3.0"
2- W5 - SEC. 16 - 2'-1 1/2" WELD 6.0"

1- P1 - 3x1 PL x 7" WITH 3" SKEW

Figure D.16 Shop Details, Test KN-2,

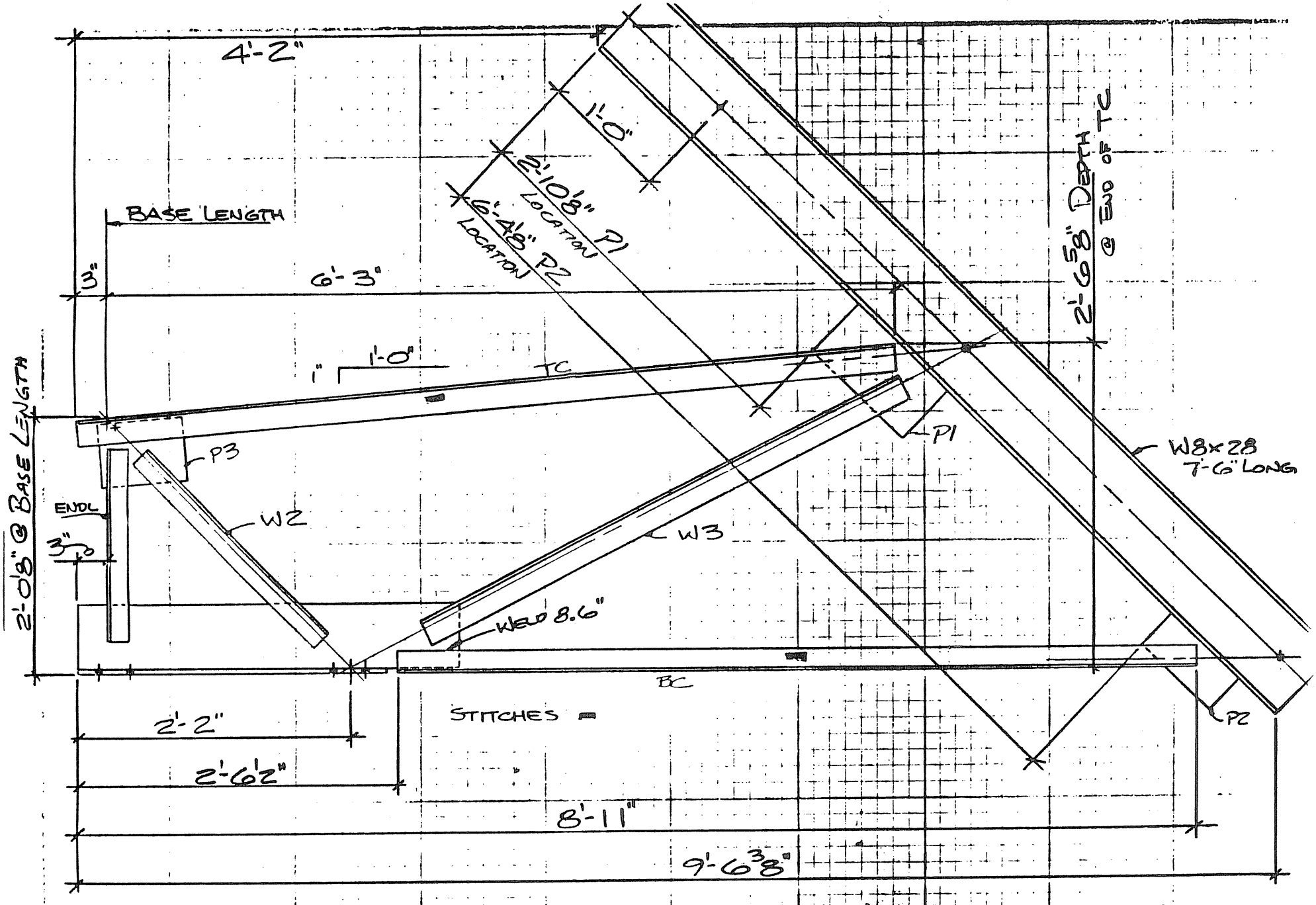

2-TC - SEC. 33 - 6'-6¼" - WELD 5.7" TO P1

2-BC - SEC. 23 - 6'-4½" - WELD 8.6" TO P2

2-ENDL - SEC. 23 - 1'-6" - WELD 8.0"

2-W2 - SEC. 23 - 2'-0½" - WELD 13.2"

1-P1 - 6x1" PL x 1'-0" } CENTER P1 & P2 ON W8x28

1-P2 - 4x1" PL x 9" } WELD ALL ALONG @ BEAM

1-P3 - 6x1" PL x 8" WELD ALL @ TC (4 PLACES)

Figure D.16 Shop Details, Test KN-2, Continued

HOLE SIZE 13/16" Ø
3½" GAGE

BOLT SIZE ¾" x 2¼" A325

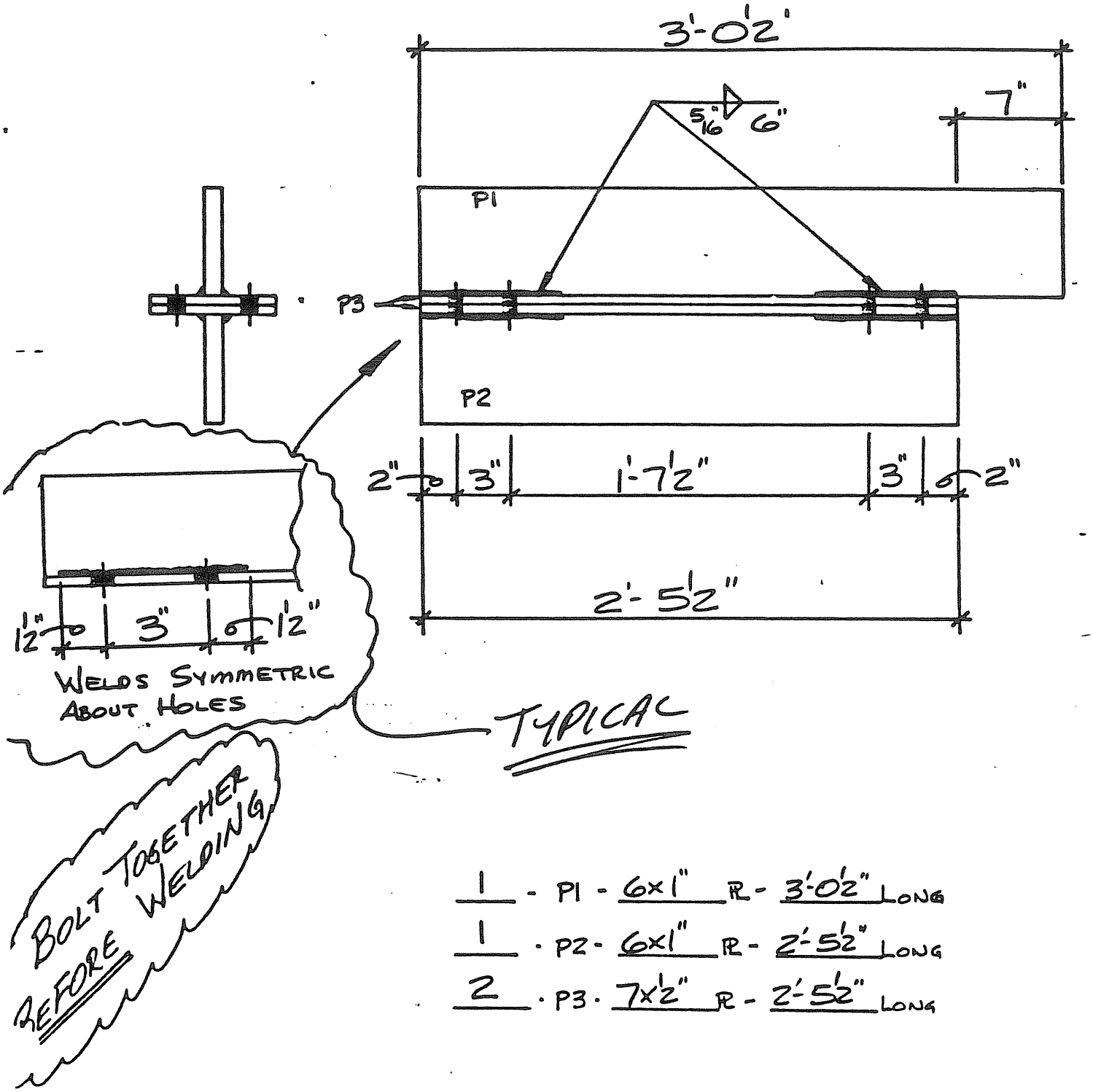

1 - P1 - 6x1" PL - 3'-0½" LONG
1 - P2 - 6x1" PL - 2'-5½" LONG
2 - P3 - 7x½" PL - 2'-5½" LONG

Figure D.16 Shop Details, Test KN-2, Continued

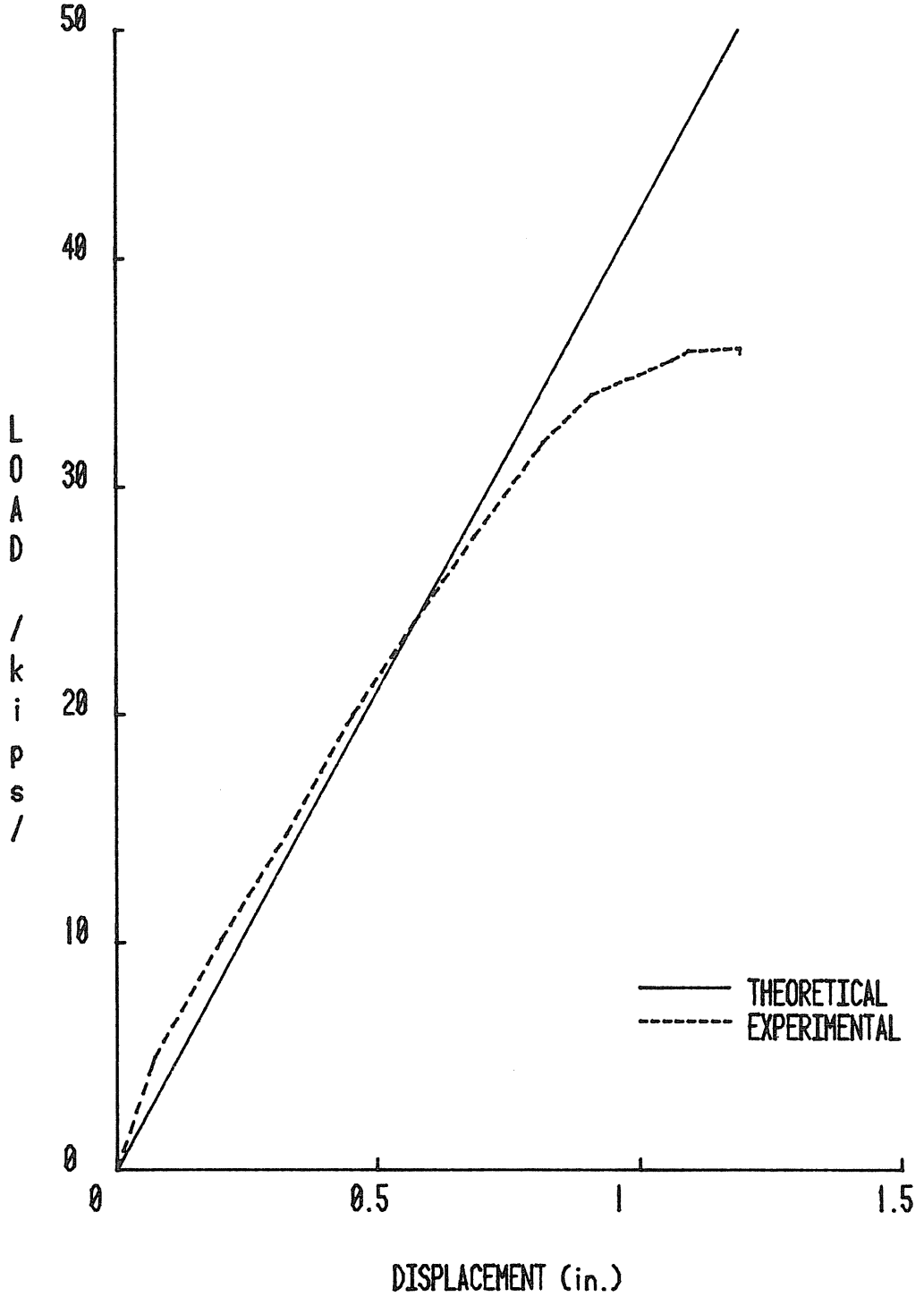

Figure D.17 Load vs. Displ. in Load Direction, KN-2

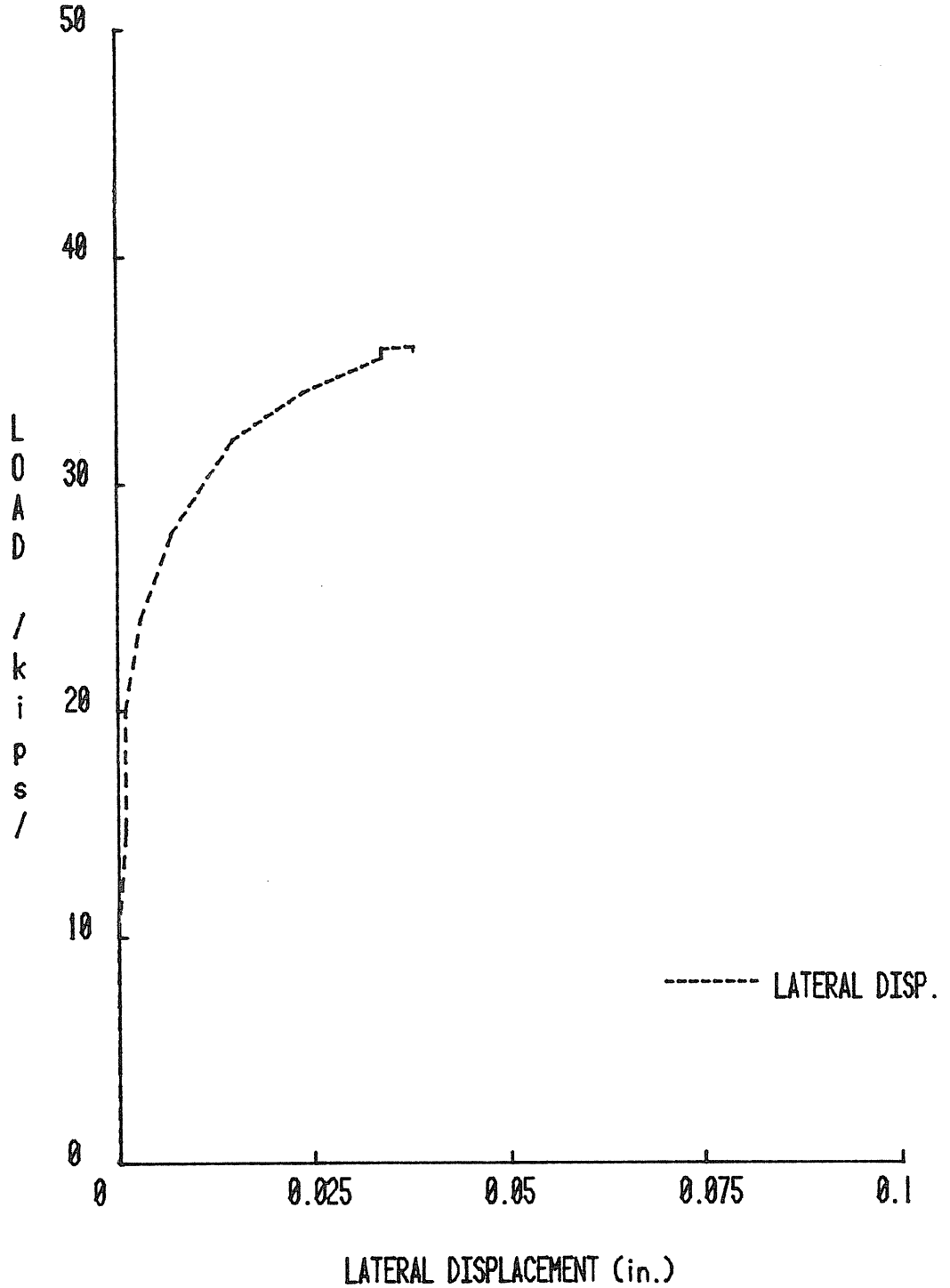

Figure D.18 Load vs. Lateral Displacement, KN-2

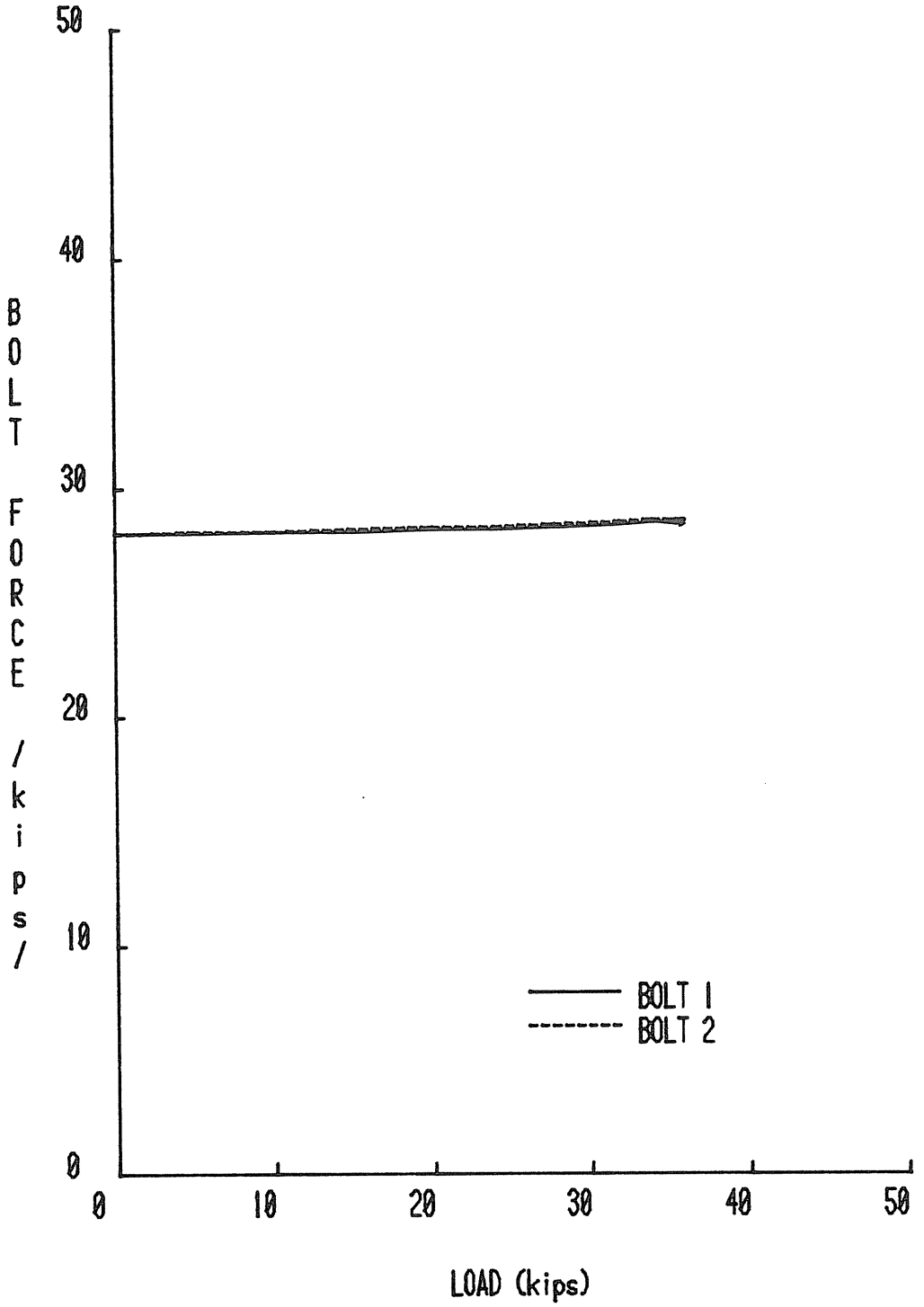

Figure D.19 Bolt Force vs. Load, KN-2

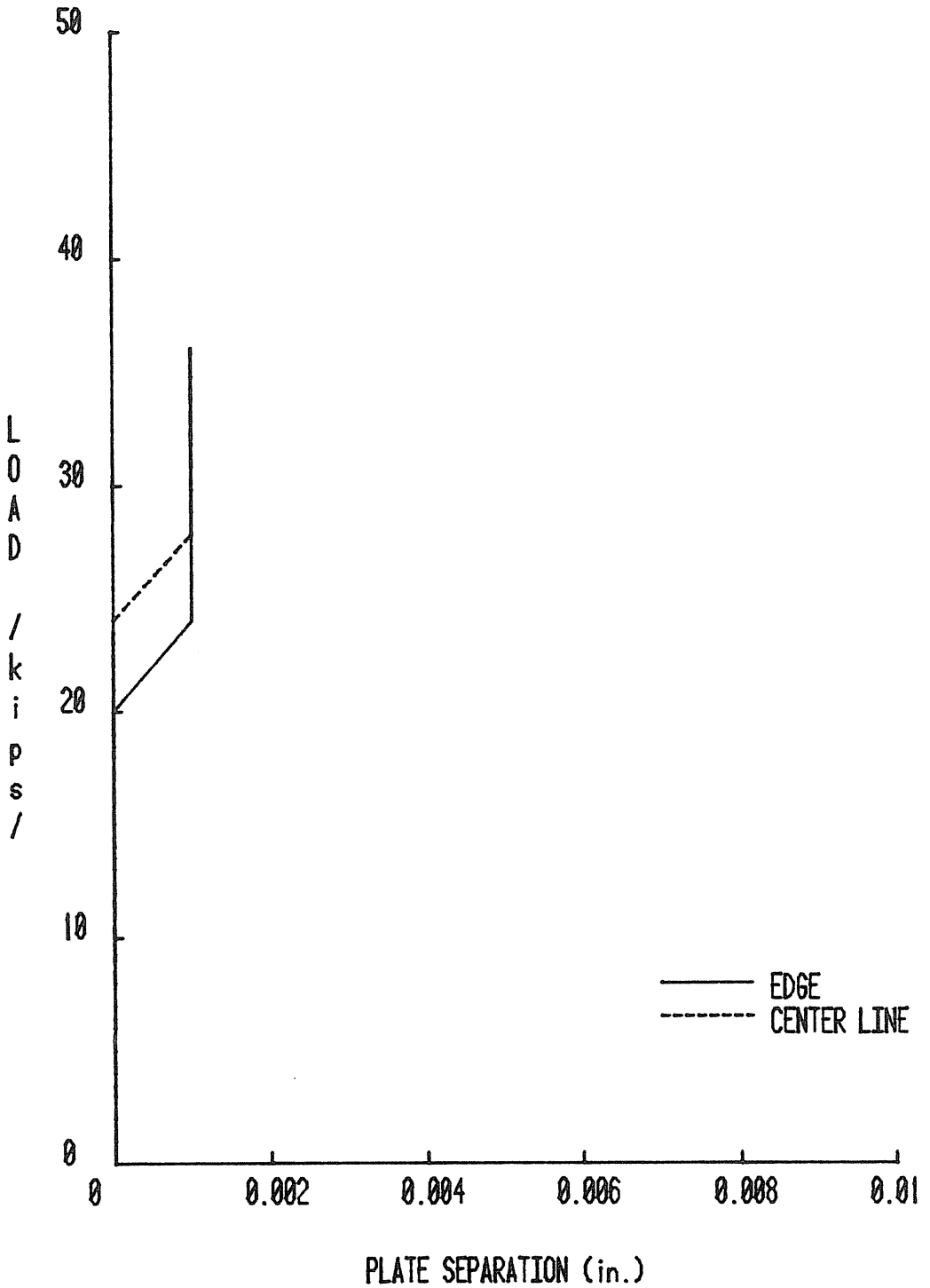

Figure D.20 Load vs. Plate Separation, KN-2

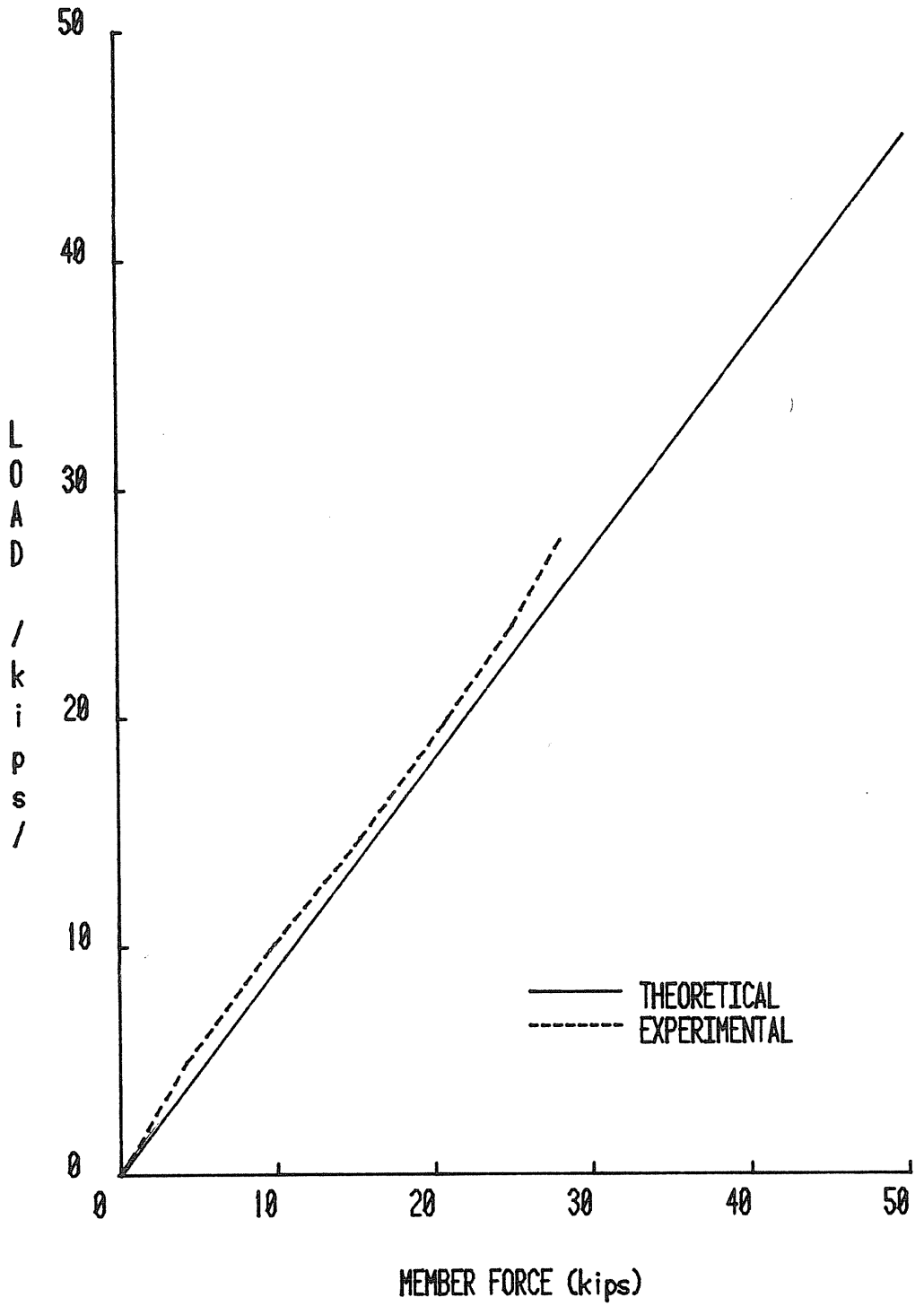

Figure D.21 Load vs. Member (#42) Force, KN-2

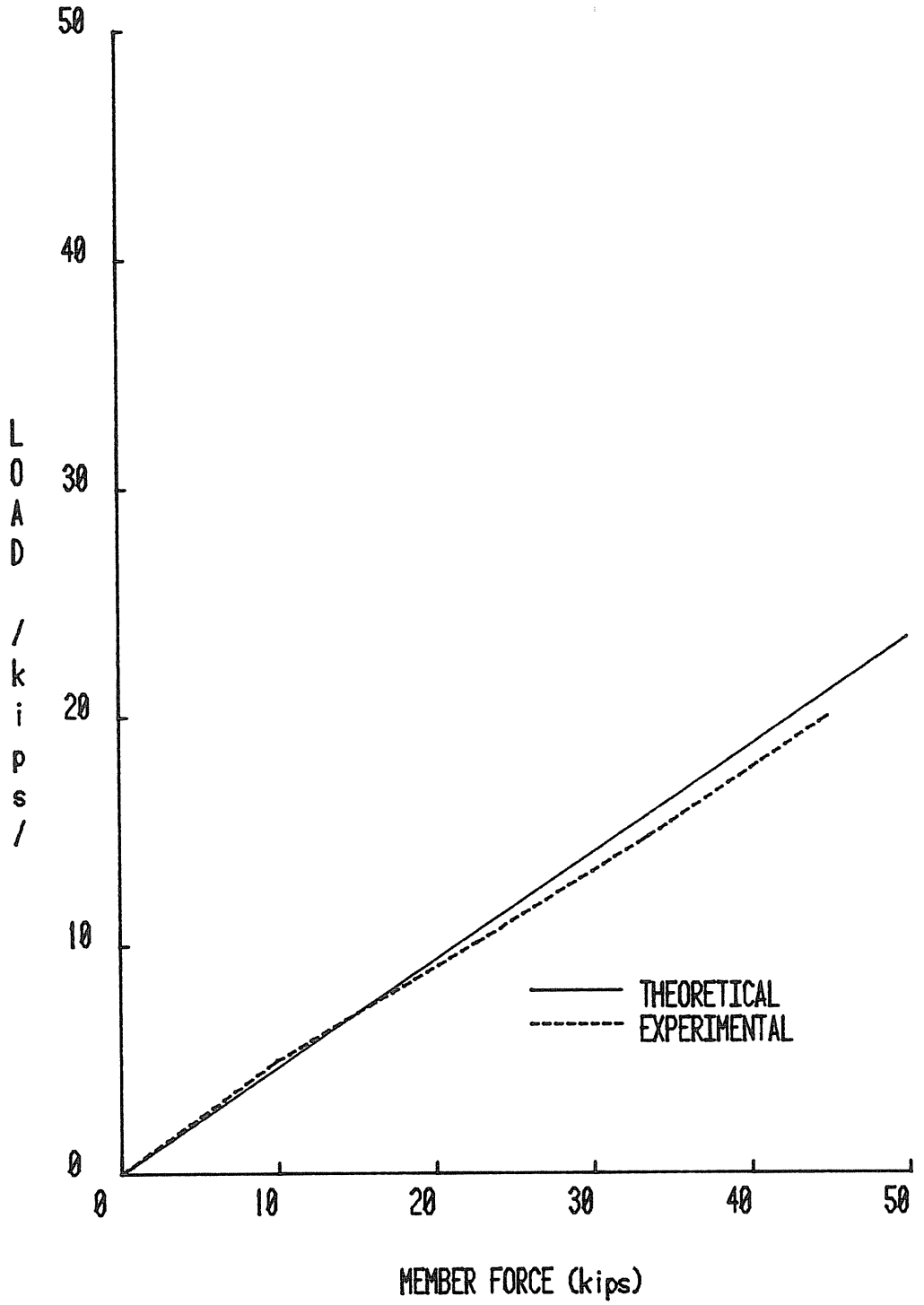

Figure D.22 Load vs. Member (#43) Force, KN-2

VULCRAFT KNEE CONNECTION TEST SUMMARY

Project: VULCRAFT

Test No.: KN-3A

Test Date: 4-10-84

Purpose: Study of the Behavior of Knee Area

Knee Area Dimensions: 30 in. x 30.63 in.

Knee Diagonal: 2Ls 2.5x2.5x23

Splice Plate Dimensions: —

Bolt Diameter: 3/4 No. of Bolts in Tension: 4

Pretension Force per Bolt: 28 kips

Failure Load: 58.62 kips (Ram Load)

Failure Mode: Buckling of First Member in Rafter (Member #36)

Predicted Failure Loads:

Method: VULCRAFT ANALYSIS Load: 38.86x1.66 = 64.5 kips

Method: Load:

Method: Load:

Method: Load:

Maximum Displ. in Load Direction: 0.716" @ 58.62 kips

Maximum Plate Separation: — @ —

Discussion:

Observations:

-At approximately 25 kips ram load, local yieldings were detected at the ends and around the batten angle of member #36 which later buckled.

-At ram load of 40 kips, yielding was detected on compression zone of connection stem plate. Beyond this load, bolt force in east side bolt started decreasing and that of west side bolt increased. This could be interpreted as a sign of out-of-plane displacement of inner corner of knee.

-At approximately 25 kips, the specimen at the ram end was free from the vertical support which it was originally resting on.

Loading:

-Maximum applied load by the ram was 58.62 kips.

-Maximum bolt force was 29.6 kips in west side bolt and 28 kips in east side bolt.

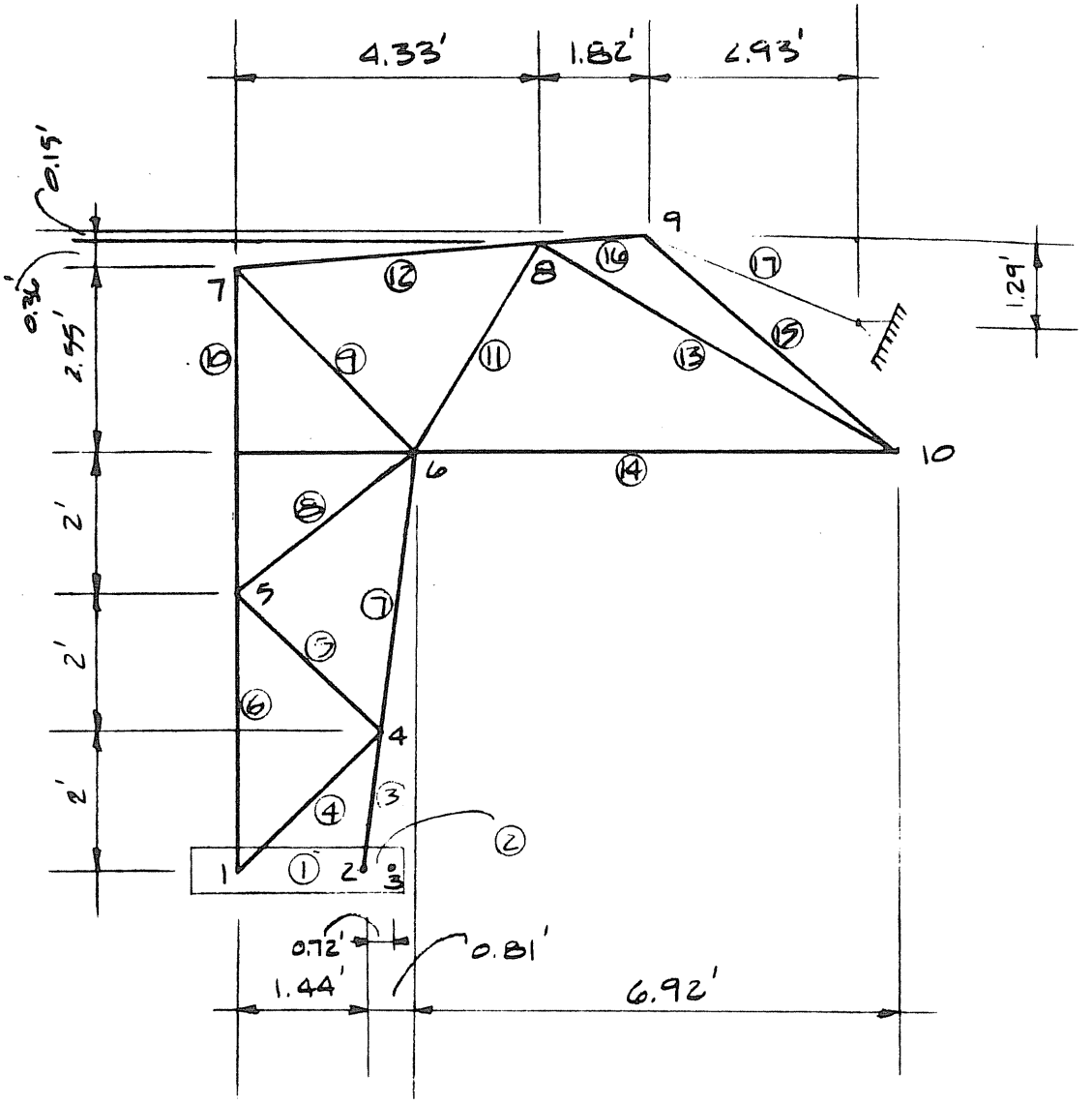

Figure D.23 Specimen Geometry, Test KN-3A

Test KN-3
=========

Given:
------

tf=0.500 in.	(Thickness of flange in tee hanger)
a =1.750 in.	(Distance from bolt center to edge)
b =1.250 in.	(Distance from bolt center to web)
p =3.000 in.	(Width of tee hanger per bolt line)
Fy=50.00 ksi	(Yield stress of tee hanger plate)
Bolt type=A325	(Type of bolt. A325 or A490)
db=0.750 in.	(Diameter of Bolt)
B =38.88 kips.	(Ultimate capacity of bolt)
Fyb=88.00 kips.	(Yield stress of threaded bolt)
Ptb=27.21 kips.	(Pretension force in bolt=0.70 x B)

Solution:

According to the method outlined in Chapter 4 of the AISC Manual, the results are:

Service load capacity = 37.05 kips.
======

Service load capacity times 2.0= 74.11 kips.
======

Predicted failure mode is plate yielding

Predicted bolt force at factored load= 27.21 kips
======

According to the method outlined in THE SPLIT-TEE ANALOGY IN BOLTED SPLICES AND BEAM-COLUMN CONNECTIONS, by Kennedy et al published in Joints in Structural Steelwork, John Wiley & Sons, NY ,1981, pp.2.138-2.157, the results are:

Elastic load capacity = 29.56 kips
======

Ultimate load capacity = 59.20 kips
======

Predicted failure mode is plate yielding

Predicted bolt force at factored load= 27.21 kips
======

Figure D.24 AISC and Kennedy Analyses, Test KN-3A

```
*****************************************************************
                    STIFFNESS ANALYSIS
                          OF
                       PLANE FRAMES
*****************************************************************

 JOB NAME: VULCRAFT KN-3A FRAME,WORKING LOAD=38.86 KIPS


**** JOINT COORDINATES ****

JOINT    X-COORD    Y-COORD
         ( FT. )    ( FT. )

     1     0.000      0.000
     2     1.437      0.000
     3     2.157      0.000
     4     1.708      2.000
     5     0.000      4.000
     6     2.250      6.000
     7     0.000      8.550
     8     4.333      8.913
     9     6.150      9.270
    10     9.080      6.000
    11     9.080      7.775

**** SUPPORT CONDITIONS ****

 SUPPORT  X-DIR.   Y-DIR.   Z-DIR.
       3       1        1        0
      11       1        1        0


**** MEMBER INCIDENCES ****

 MEMBER    I JOINT    J JOINT
      1          1          2
      2          2          3
      3          1          5
      4          5          7
      5          7          8
      6          8          9
      7          9         11
     18          2          4
     19          4          6
     20          6         12
     32          1          4
     33          4          5
     34          5          6
     35          6          7
     36          5          8
     37          8         10
     38          9         10
```

Figure D.25 Stiffness Analysis, Test KN-3A,

**** MEMBER PROPERTIES ****

MEMBER	AREA (IN^2)	INERTIA (IN^4)	ELASTICITY (K/IN^2)
1	10.00	83.33	29000.0
2	10.00	83.33	29000.0
3	1.75	0.65	29000.0
4	1.75	0.65	29000.0
5	3.21	2.76	29000.0
6	3.21	2.76	29000.0
7	100.00	0.00	29000.0
18	3.21	2.76	29000.0
19	3.21	2.76	29000.0
20	2.19	1.31	29000.0
32	0.75	0.16	29000.0
33	0.75	0.16	29000.0
34	0.75	0.16	29000.0
35	2.19	1.31	29000.0
36	1.89	1.14	29000.0
37	2.03	1.22	29000.0
38	2.62	2.28	29000.0

**** LOADING 1 **** DL+LL

** JOINT LOADS **

JOINT	FORCE X (K)	FORCE Y (K)	MOMENT Z (FT-K)
1	0.00	0.00	0.00
2	0.00	0.00	0.00
3	0.00	0.00	0.00
4	0.00	0.00	0.00
5	0.00	0.00	0.00
6	0.00	0.00	0.00
7	0.00	0.00	0.00
8	0.00	0.00	0.00
9	-14.62	-36.00	0.00
10	0.00	0.00	0.00
11	0.00	0.00	0.00

Figure D.25 Stiffness Analysis, Test KN-3A, Continued

```
************************
* RESULTS OF ANALYSIS *
************************
```

JOB NAME: VULCRAFT KN-3A FRAME, WORKING LOAD=38.86 KIPS LOADING 1 DL+L

***** JOINT DISPLACEMENTS *****

JOINT	X-DIR. (IN)	Y-DIR. (IN)	Z-DIR. (RAD)
1	-0.0010	-0.1278	0.0042
2	-0.0005	-0.0489	0.0053
3	0.0000	0.0000	0.0058
4	-0.1246	-0.0463	0.0047
5	-0.2099	-0.1017	0.0024
6	-0.2606	-0.0648	-0.0004
7	-0.2070	-0.0590	-0.0003
8	-0.1795	-0.1687	-0.0076
9	-0.1707	-0.3862	-0.0090
10	-0.2865	-0.4609	-0.0018
11	0.0000	0.0000	0.0210

***** REACTIONS *****

JOINT	FORCE X (K)	FORCE Y (K)	MOMENT Z (FT-K)
3	15.648	35.544	0.000
11	-1.028	0.456	0.000

Figure D.25 Stiffness Analysis, Test KN-3A, Continued

***** MEMBER END ACTIONS -- LOCAL COORDINATES *****

MEMBER	JOINT	AXIAL (K)	SHEAR (K)	MOMENT (FT-K)
1	1	-8.28	17.91	0.16
	2	8.28	-17.91	25.57
2	2	-15.65	-35.54	-25.59
	3	15.65	35.54	0.00
3	1	-27.46	-0.10	-0.14
	5	27.46	0.10	-0.26
4	5	-39.65	0.09	0.27
	7	39.65	-0.09	0.11
5	7	-32.54	-0.63	-0.45
	8	32.54	0.63	-2.30
6	8	42.23	3.31	3.46
	9	-42.23	-3.31	2.58
7	9	1.12	0.00	0.00
	11	-1.12	0.00	0.00
18	2	53.96	-0.13	0.03
	4	-53.96	0.13	-0.28
19	4	70.55	-0.24	0.23
	6	-70.55	0.24	-1.20
20	6	20.11	0.25	0.91
	10	-20.11	-0.25	0.80
32	1	12.58	-0.01	-0.02
	4	-12.58	0.01	-0.01
33	4	-9.01	0.02	0.06
	5	9.01	-0.02	0.00
34	5	8.03	-0.03	-0.01
	6	-8.03	0.03	-0.08
35	6	48.58	0.19	0.32
	7	-48.58	-0.19	0.34
36	6	47.67	-0.23	0.05
	8	-47.67	0.23	-0.27
37	8	-54.26	-0.01	-0.25
	10	54.26	0.01	0.22
38	9	38.75	-0.85	-2.57
	10	-38.75	0.85	-1.02

Figure D.25 Stiffness Analysis, Test KN-3A, Continued

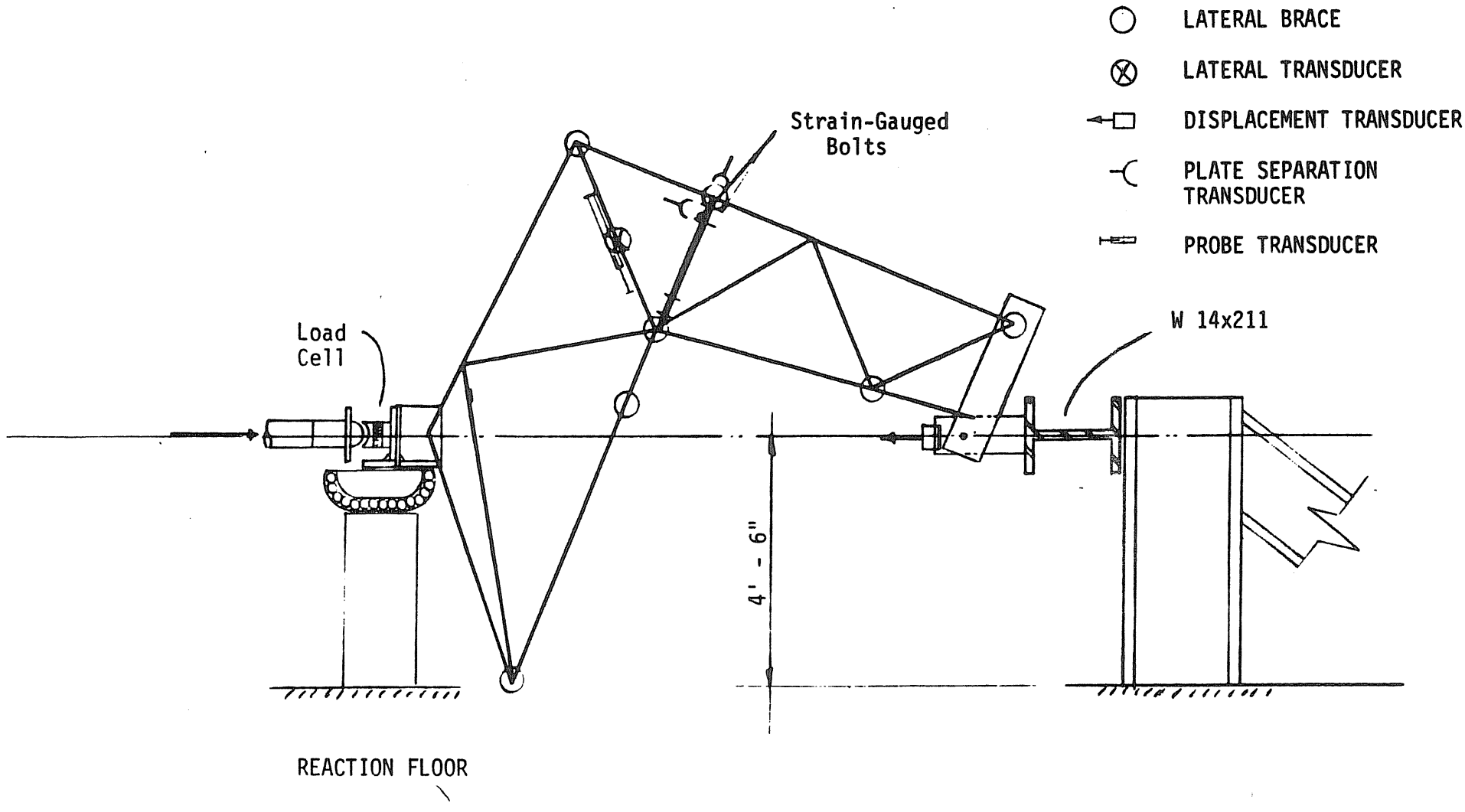

Figure D.26 Test Setup, Test KN-3A

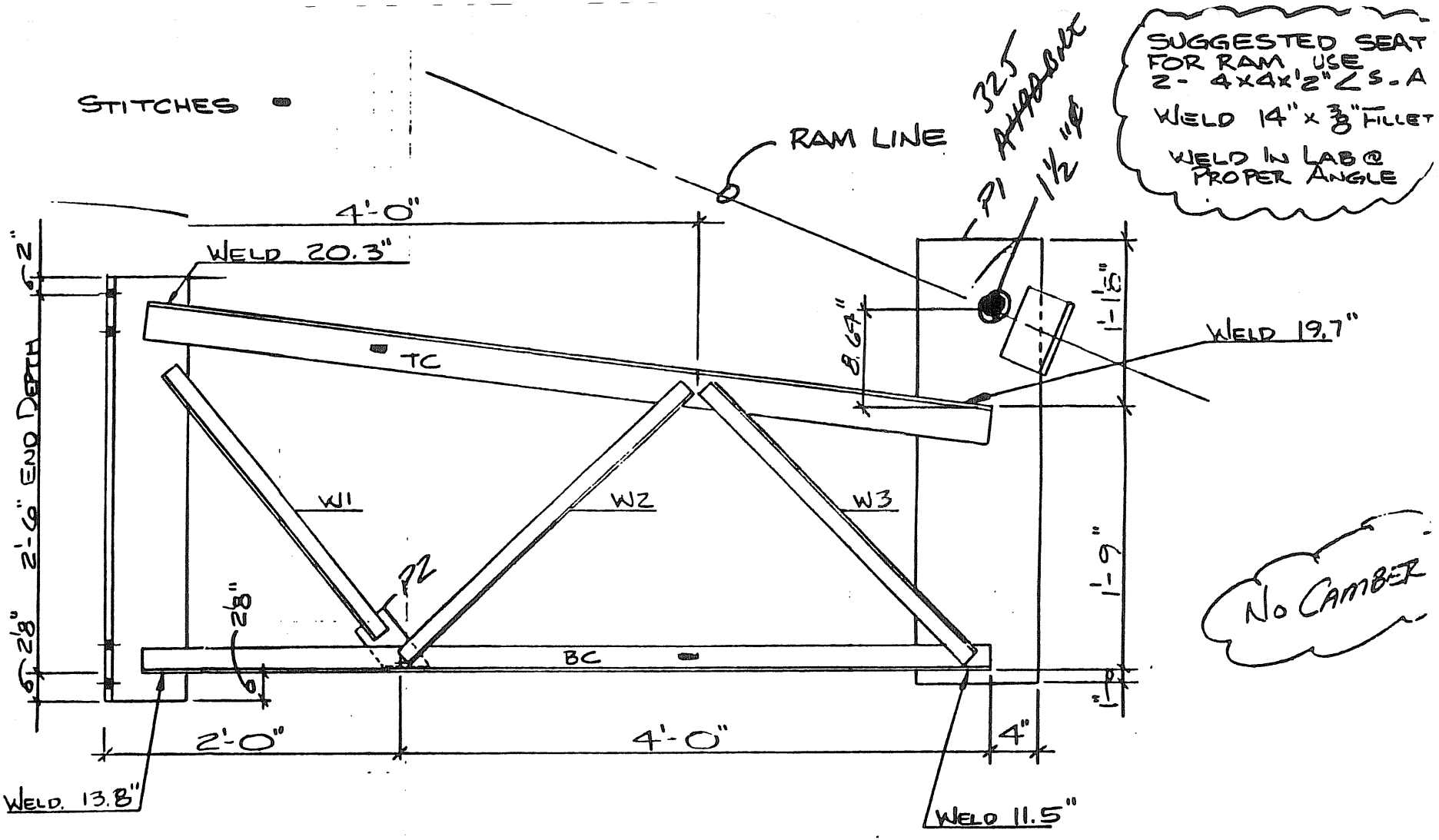

2- TC - SEC. 46 - 5'-9⅜"
2- BC - SEC. 31 - 5'-9"

2- W1 - SEC. 16 - 2'-3½" WELD 6.0"
2- W2 - SEC. 16 - 2'-7½" WELD 4.9"
2- W3 - SEC. 16 - 2'-7" WELD 7.9"

1- P1 - 10x1" PL x 2'-11⅛" WELD 6.0"
1- P2 - 3x1 PL x 6" WITH 2½" SKEW

(QUANTITIES)
HOLD ALL WELDS

Figure D.27 Shop Details Test KN-3A,

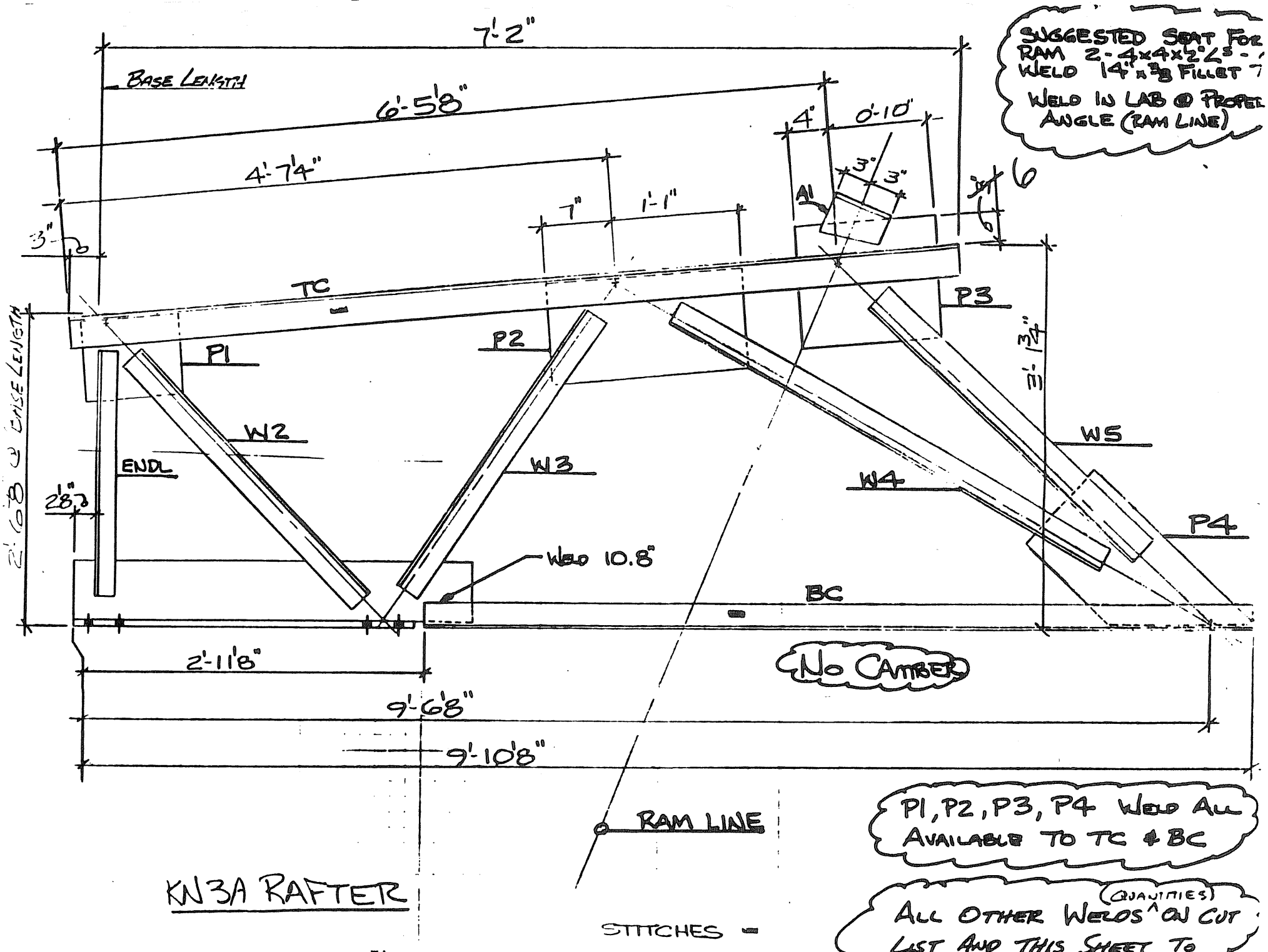

Figure D.27 Shop Details, Test KN-3A, Continued

HOLE SIZE 13/16" Ø
3½" GAGE

BOLT SIZE ¾" Ø

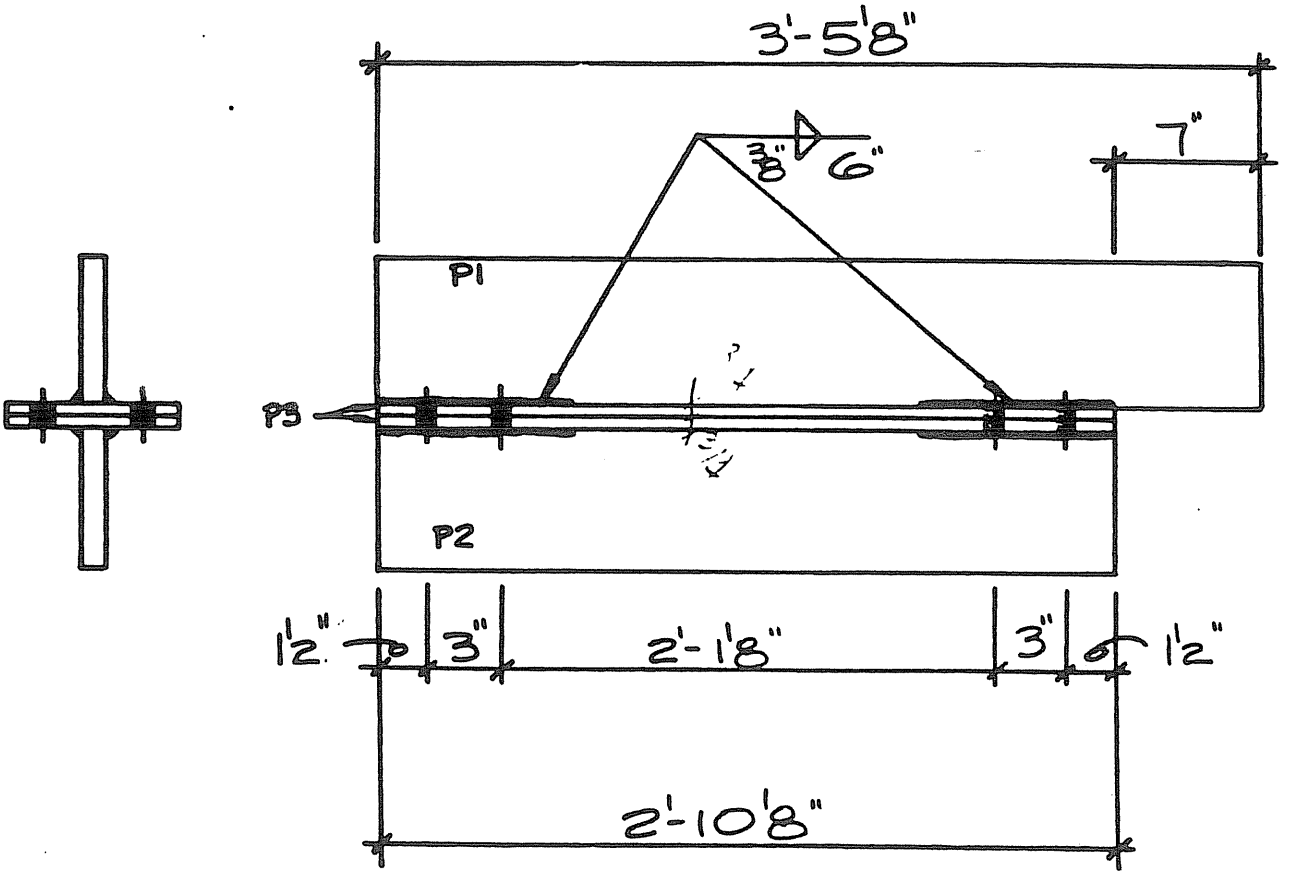

BOLT TOGETHER BEFORE WELDING

1 - P1 - 6x1" PL - 3'-5⅛" LONG
1 - P2 - 8x1" PL - 2'-10⅛" LONG
2 - P3 - 7x¾" PL - 2'-10⅛" LONG

Figure D.27 Shop Details, Test KN-3A, Continued

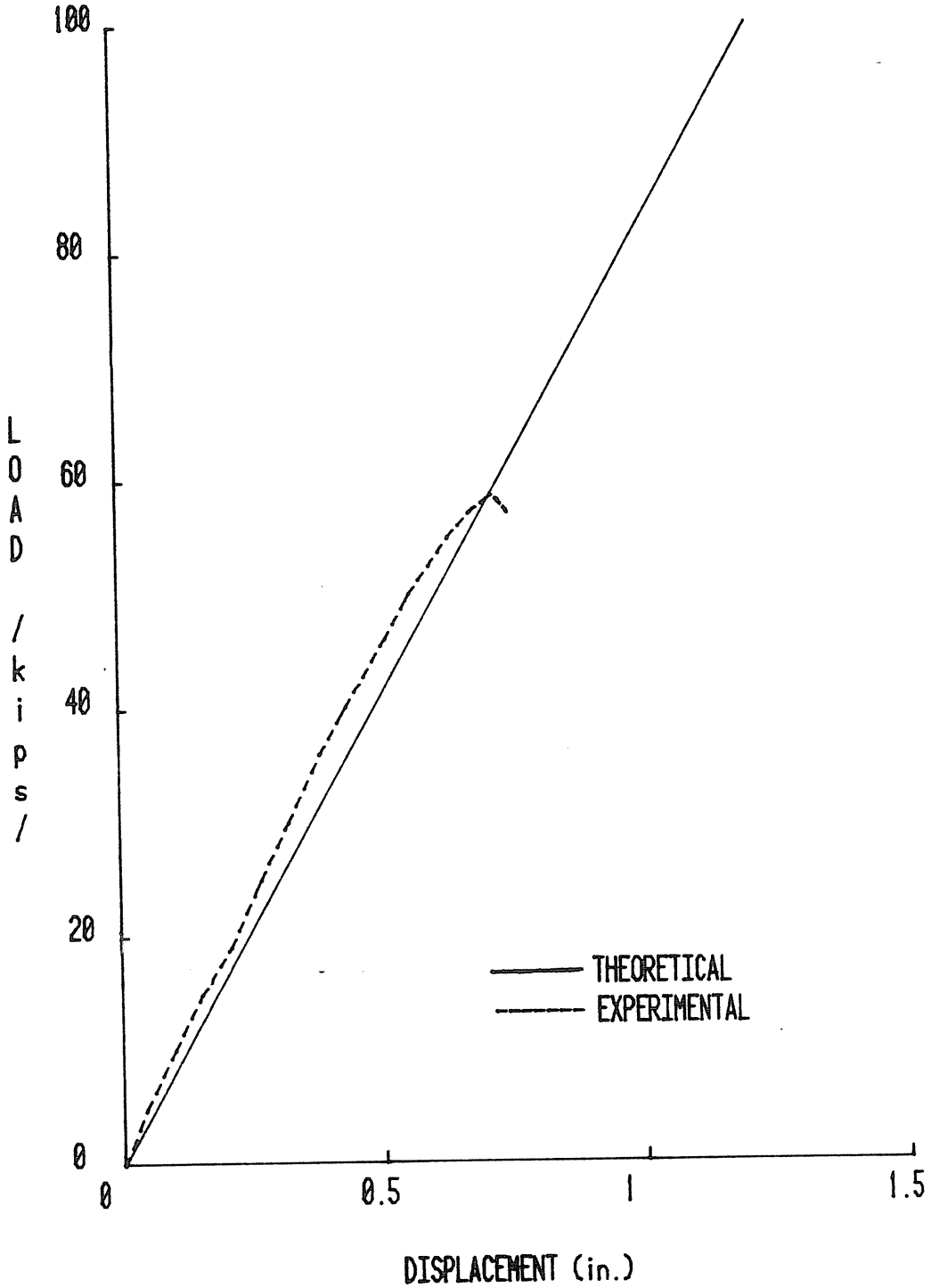

Figure D.28 Load vs. Chord Displacement, KN-3A

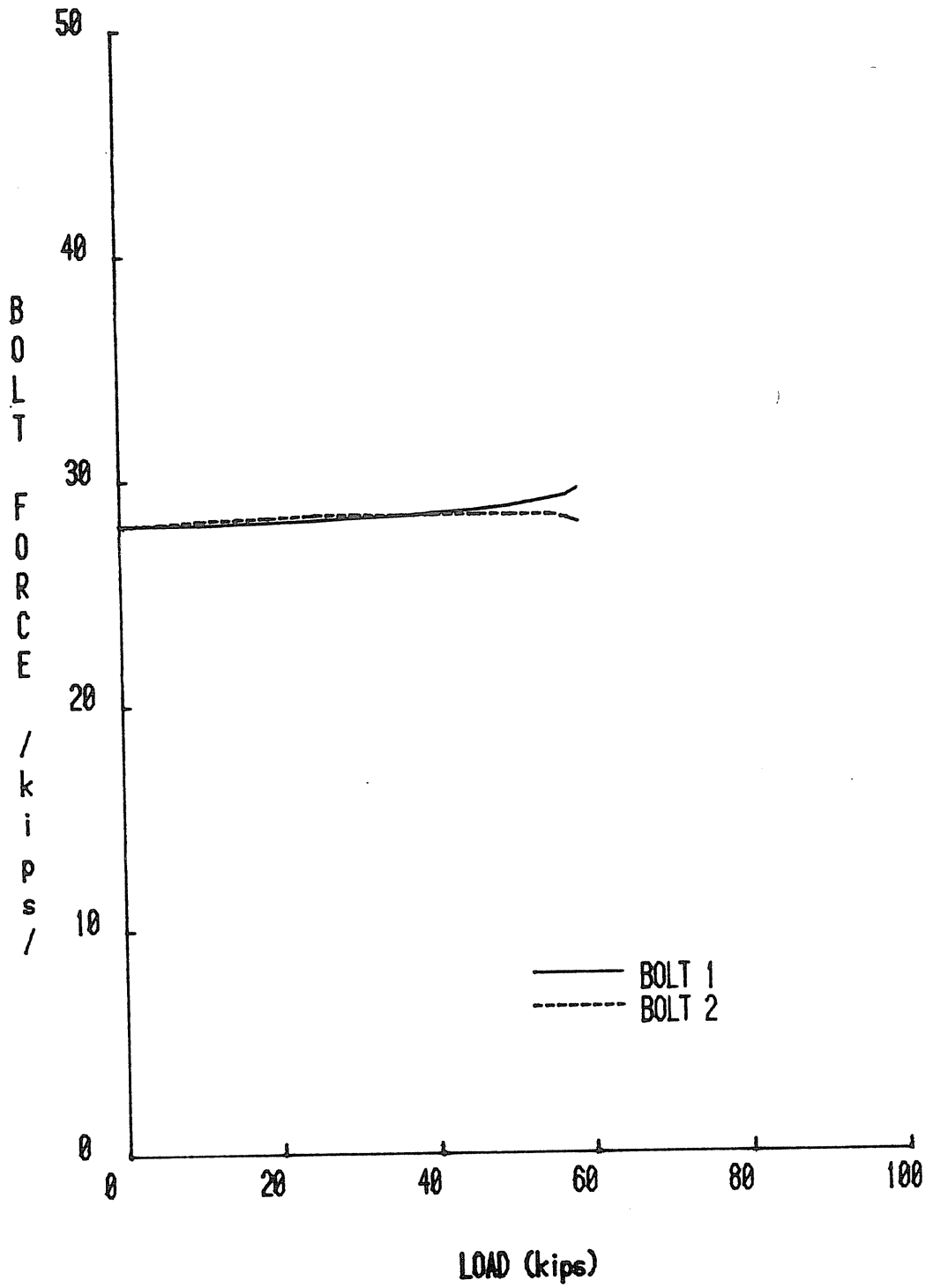

Figure D.29 Bolt Force vs. Load, KN-3A

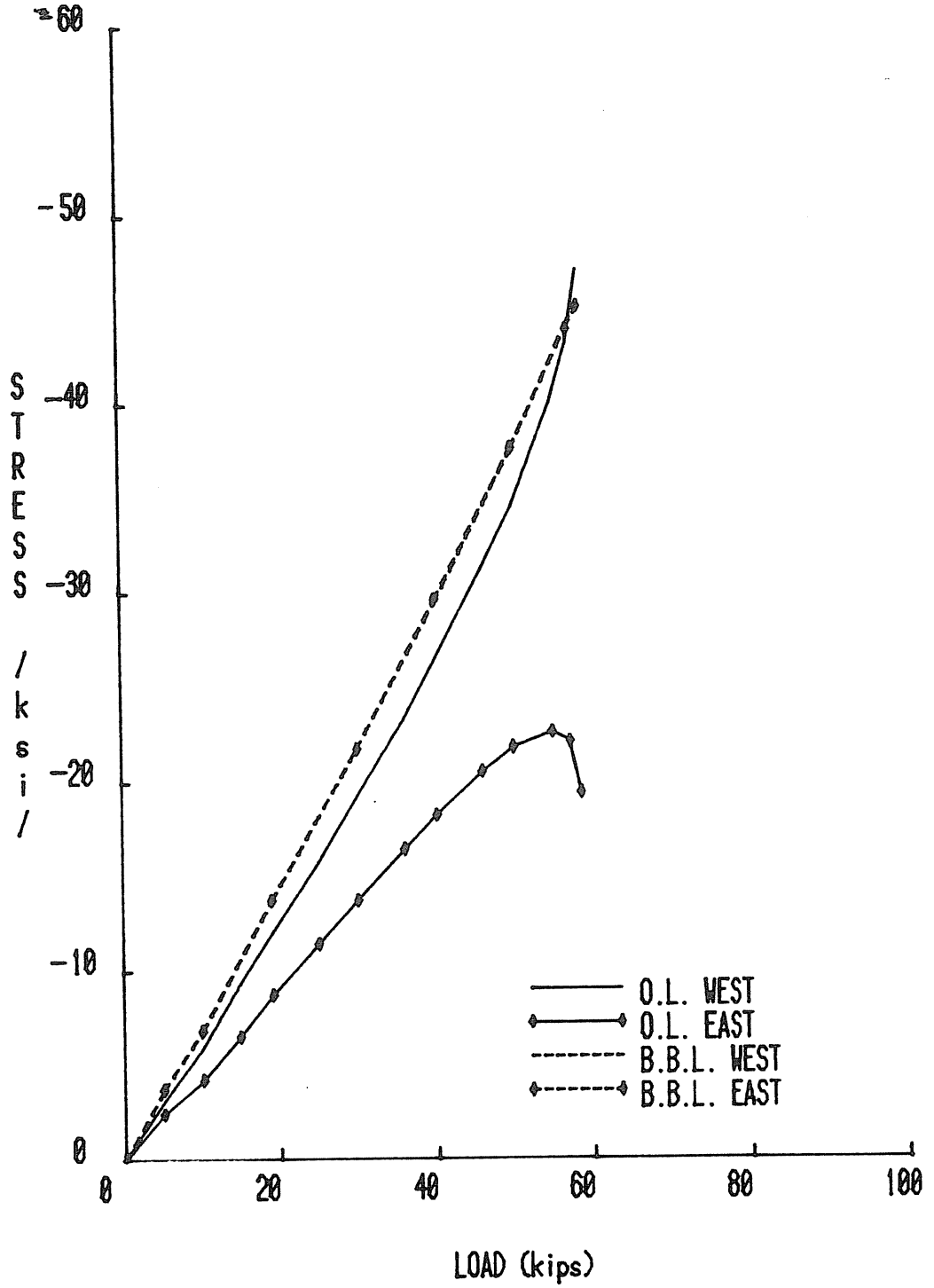

Figure D.30 Stress vs. Load, KN-3A

VULCRAFT KNEE CONNECTION TEST SUMMARY

Project: VULCRAFT

Test No.: KN-3B (Same as KN-3A with buckled member replaced by 2Ls-3 1/2x3 1/2 x1/4 (A36))

Test Date: 4-13-84

Purpose: Behavior of Knee

Knee Area Dimensions: 30 in. x 30.63 in.

Knee Diagonal: 2Ls 2.5x2.5x23

Splice Plate Dimensions: —

Bolt Diameter: 3/4 No. of Bolts in Tension: 4

Pretension Force per Bolt: 28 kips

Failure Load: 60.12 kips (Ram Load)

Failure Mode: Considerable Lateral Displacement of Inner Corner of Knee

Predicted Failure Loads:

Method: VULCRAFT ANALYSIS Load: 38.86x1.66 = 64.5 kips

Method: Load:

Method: Load:

Method: Load:

Maximum Displ. in Load Direction: .598" @ 60.12 kips

Maximum Plate Separation: .003" @ 60.12 kips

Discussion:

This specimen was the same KN-3A specimen with buckled member replaced with stronger angles. Two batten angles were provided at 1/3 points of replacing member.

Observations:

-The connection stem plate showed sign of severe yielding at inner corner of knee.

-Specimen became free from vertical support at ram end when ram load approached 20 kips. At about 40 kips ram load, the ram end of specimen jumped up suddenly and test stopped.

-Loading mechanism was adjusted and test was redone.

-At 40 kips specimen was free from vertical support.

-At ram load about 45 kips yield lines were detected at the ends and batten angle points of member #36, (the member that buckled in KN-3A test).

-At 58 kips considerable yielding was visible on stem plate of connection. Beyond this load inner corner of knee moved laterally. The maximum load that could be reached was 60.12 kips in the ram.

Loading and Deformations:

-Maximum ram load 60.12 kips.

-Maximum bolt force was 31.3 kips in west side bolt.

-Maximum axial strain in member #35 (knee diagonal member) was 0.001204in./in.

-Maximum lateral displacement was 0.570 in.

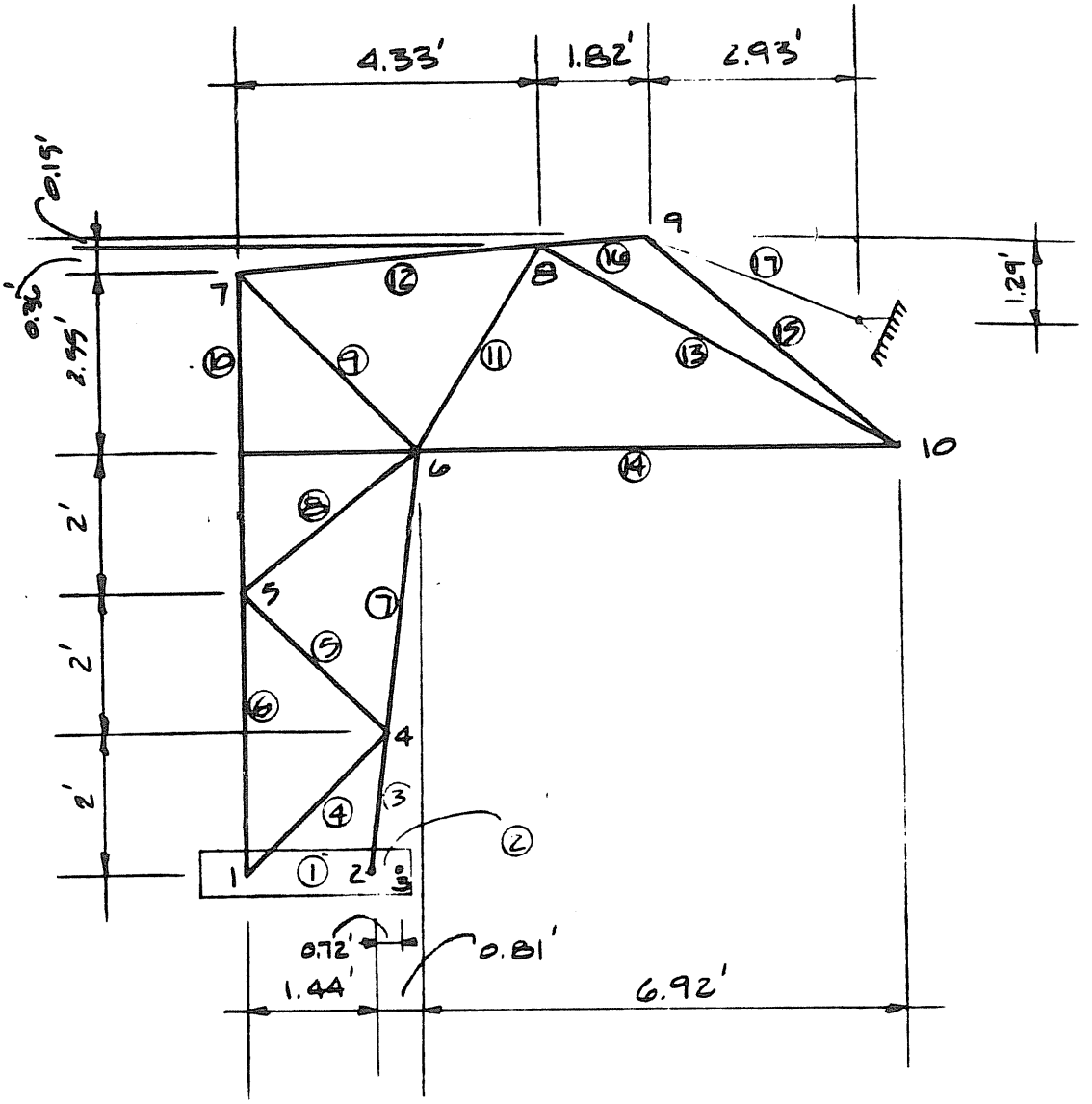

Figure D.31 Specimen Geometry, Test KN-3B

Test KN-3B
==========

Given:
---

tf=0.500 in.	(Thickness of flange in tee hanger)
a =1.750 in.	(Distance from bolt center to edge)
b =1.250 in.	(Distance from bolt center to web)
p =3.000 in.	(Width of tee hanger per bolt line)
Fy=50.00 ksi	(Yield stress of tee hanger plate)
Bolt type=A325	(Type of bolt. A325 or A490)
db=0.750 in.	(Diameter of Bolt)
B =38.88 kips.	(Ultimate capacity of bolt)
Fyb=88.00 kips.	(Yield stress of threaded bolt)
Ptb=27.21 kips.	(Pretension force in bolt=0.70 x B)

Solution:

According to the method outlined in Chapter 4 of the AISC Manual, the results are:

Service load capacity = 37.05 kips.
======

Service load capacity times 2.0= 74.11 kips.
======

Predicted failure mode is plate yielding

Predicted bolt force at factored load= 27.21 kips
======

According to the method outlined in THE SPLIT-TEE ANALOGY IN BOLTED SPLICES AND BEAM-COLUMN CONNECTIONS, by Kennedy et al published in Joints in Structural Steelwork, John Wiley & Sons, NY ,1981, pp.2.138-2.157, the results are:

Elastic load capacity = 29.56 kips
======

Ultimate load capacity = 59.20 kips
======

Predicted failure mode is plate yielding

Predicted bolt force at factored load= 27.21 kips
======

Figure D.32 AISC and Kennedy Analyses, Test KN-3B

```
*************************************************************
                    STIFFNESS ANALYSIS
                         ØF
                     PLANE FRAMES
*************************************************************

 JOB NAME: VULCRAFT KN-3B FRAME,WORKING LOAD=38.86 KIPS


**** JOINT COORDINATES ****

JOINT    X-COORD    Y-COORD
         ( FT. )    ( FT. )

     1     Ø.ØØØ      Ø.ØØØ
     2     1.437      Ø.ØØØ
     3     2.157      Ø.ØØØ
     4     1.7Ø8      2.ØØØ
     5     Ø.ØØØ      4.ØØØ
     6     2.25Ø      6.ØØØ
     7     Ø.ØØØ      8.55Ø
     8     4.333      8.913
     9     6.15Ø      9.Ø7Ø
    1Ø     9.Ø8Ø      6.ØØØ
    11     9.Ø8Ø      7.775


**** SUPPORT CONDITIONS ****

 SUPPORT  X-DIR.  Y-DIR.  Z-DIR.
       3       1       1       Ø
      11       1       1       Ø


**** MEMBER INCIDENCES ****

 MEMBER    I JOINT    J JOINT
      1          1          2
      2          2          3
      3          1          5
      4          5          7
      5          7          8
      6          8          9
      7          9         11
     18          2          4
     19          4          6
     2Ø          6         1Ø
     32          1          4
     33          4          5
     34          5          6
     35          6          7
     36          6          8
     37          8         1Ø
     38          9         1Ø
```

Figure D.33 Stiffness Analysis, Test KN-3B,

**** MEMBER PROPERTIES ****

MEMBER	AREA (IN^2)	INERTIA (IN^4)	ELASTICITY (K/IN^2)
1	10.00	83.33	29000.0
2	10.00	83.33	29000.0
3	1.75	0.65	29000.0
4	1.75	0.65	29000.0
5	3.21	2.76	29000.0
6	3.21	2.76	29000.0
7	100.00	0.00	29000.0
18	3.21	2.76	29000.0
19	3.21	2.76	29000.0
20	2.19	1.31	29000.0
32	0.75	0.16	29000.0
33	0.75	0.16	29000.0
34	0.75	0.16	29000.0
35	2.19	1.31	29000.0
36	3.38	4.02	29000.0
37	2.03	1.22	29000.0
38	2.62	2.28	29000.0

**** LOADING 1 **** DL+LL

** JOINT LOADS **

JOINT	FORCE X (K)	FORCE Y (K)	MOMENT Z (FT-K)
1	0.00	0.00	0.00
2	0.00	0.00	0.00
3	0.00	0.00	0.00
4	0.00	0.00	0.00
5	0.00	0.00	0.00
6	0.00	0.00	0.00
7	0.00	0.00	0.00
8	0.00	0.00	0.00
9	-14.62	-36.00	0.00
10	0.00	0.00	0.00
11	0.00	0.00	0.00

Figure D.33 Stiffness Analysis, Test KN-3B, Continued

```
************************
* RESULTS OF ANALYSIS *
************************
```

JOB NAME: VULCRAFT KN-3B FRAME,WORKING LOAD=38.86 KIPS LOADING 1 DL+LL

***** JOINT DISPLACEMENTS *****

JOINT	X-DIR. (IN)	Y-DIR. (IN)	Z-DIR. (RAD)
1	-0.0010	-0.1251	0.0041
2	-0.0005	-0.0481	0.0052
3	0.0000	0.0000	0.0057
4	-0.1222	-0.0457	0.0047
5	-0.2049	-0.0991	0.0023
6	-0.2532	-0.0649	-0.0006
7	-0.1964	-0.0564	-0.0004
8	-0.1702	-0.1501	-0.0064
9	-0.1615	-0.3654	-0.0093
10	-0.2786	-0.4420	-0.0018
11	0.0000	0.0000	0.0203

***** REACTIONS *****

JOINT	FORCE X (K)	FORCE Y (K)	MOMENT Z (FT-K)
3	15.648	35.544	0.000
11	-1.028	0.456	0.000

Figure D.33 Stiffness Analysis, Test KN-3B, Continued

***** MEMBER END ACTIONS -- LOCAL COORDINATES *****

MEMBER	JOINT	AXIAL (K)	SHEAR (K)	MOMENT (FT-K)
1	1	-8.29	17.90	0.16
	2	8.29	-17.90	25.56
2	2	-15.65	-35.54	-25.59
	3	15.65	35.54	0.00
3	1	-27.47	-0.10	-0.14
	5	27.47	0.10	-0.26
4	5	-39.63	0.09	0.28
	7	39.63	-0.09	0.12
5	7	-32.56	-0.56	-0.44
	8	32.56	0.56	-1.98
6	8	41.70	3.92	4.46
	9	-41.70	-3.92	2.69
7	9	1.12	0.00	0.00
	11	-1.12	0.00	0.00
18	2	53.95	-0.12	0.03
	4	-53.95	0.12	-0.27
19	4	70.54	-0.25	0.22
	6	-70.54	0.25	-1.24
20	6	19.70	0.23	0.82
	10	-19.70	-0.23	0.73
32	1	12.60	-0.01	-0.02
	4	-12.60	0.01	-0.01
33	4	-8.99	0.02	0.05
	5	8.99	-0.02	0.07
34	5	8.01	-0.03	-0.02
	6	-8.01	0.03	-0.08
35	6	48.64	0.18	0.25
	7	-48.64	-0.18	0.33
36	6	47.88	-0.61	0.21
	8	-47.88	0.61	-2.42
37	8	-53.13	0.04	-0.06
	10	53.13	-0.04	0.32
38	9	37.94	-0.88	-2.68
	10	-37.94	0.88	-1.02

Figure D.33 Stiffness Analysis, Test KN-3B, Continued

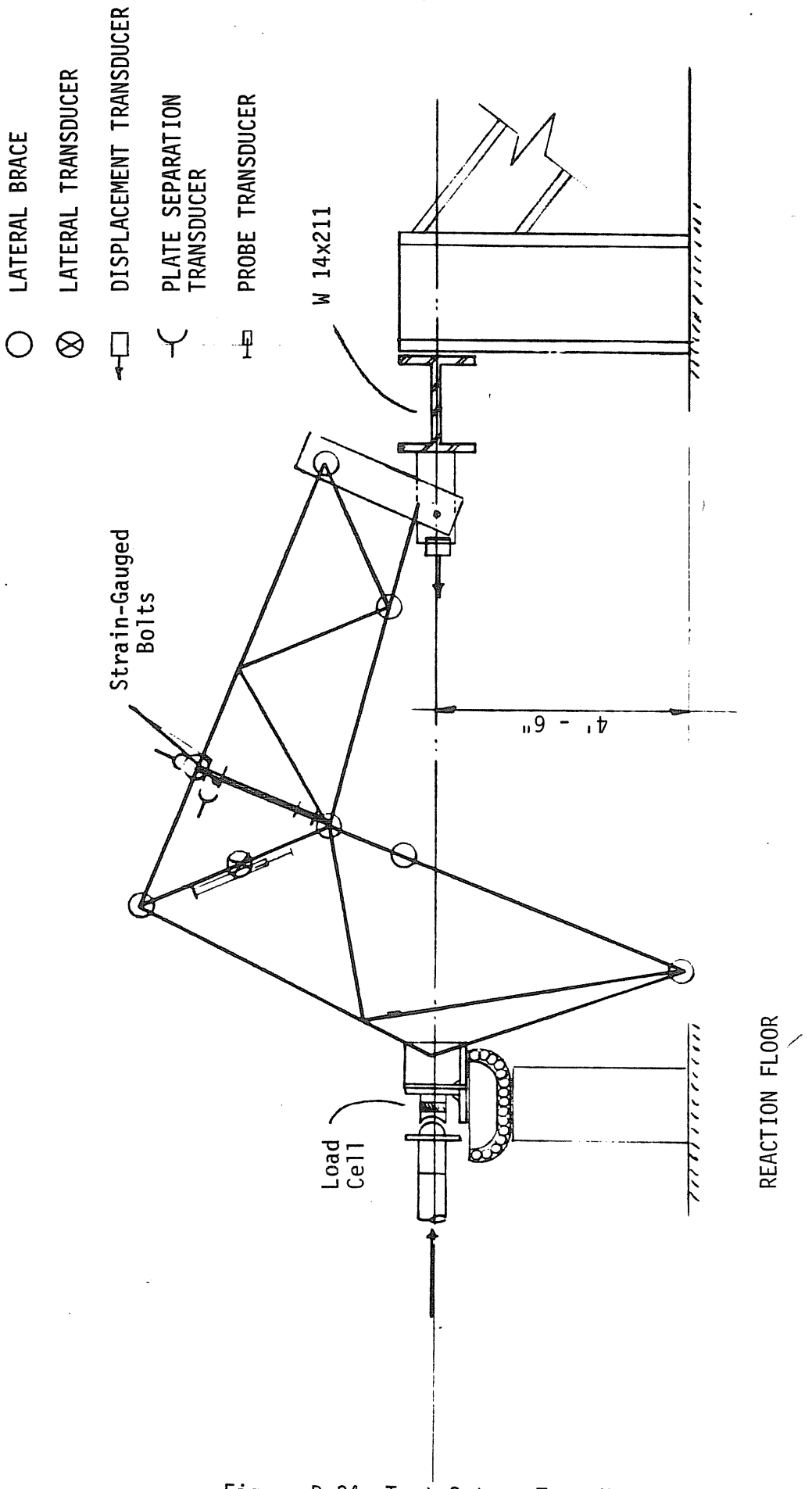

Figure D.34 Test Setup, Test KN-3B

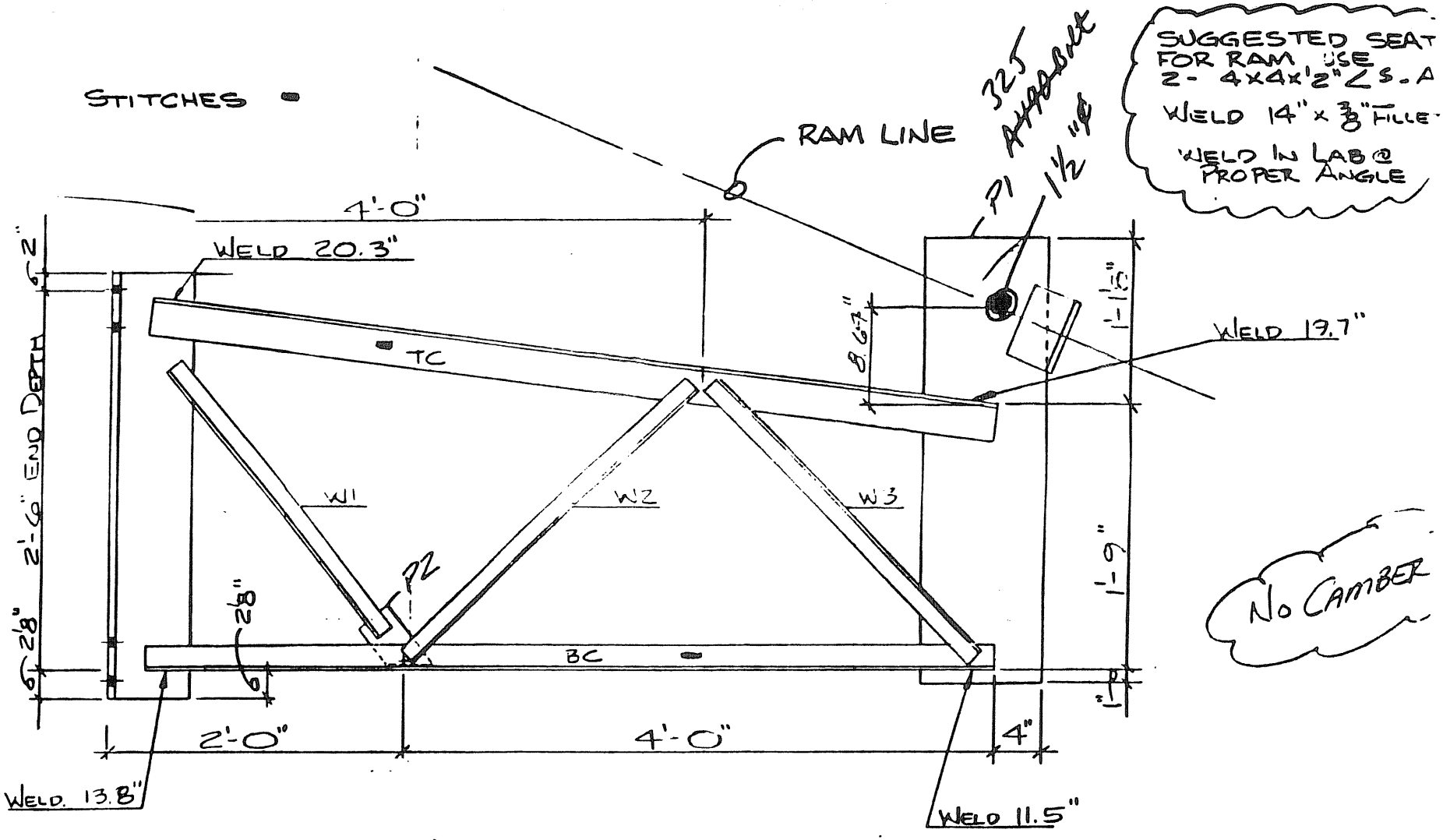

2- TC - SEC. 46 - 5'-9⅜"
2- BC - SEC. 31 - 5'-9"

2- W1 - SEC. 16 - 2'-3½" WELD 6.0"
2- W2 - SEC. 16 - 2'-7½" WELD 4.9"
2- W3 - SEC. 16 - 2'-7" WELD 7.9"

1- P1 - 10x1" PL x 2'-11⅛" WELD 6.0"
1- P2 - 3x1 PL x 6" WITH 2½" SKEW

(QUANTITIES)
HOLD ALL WELDS

Figure D.35 Shop Details, Test KN-3B

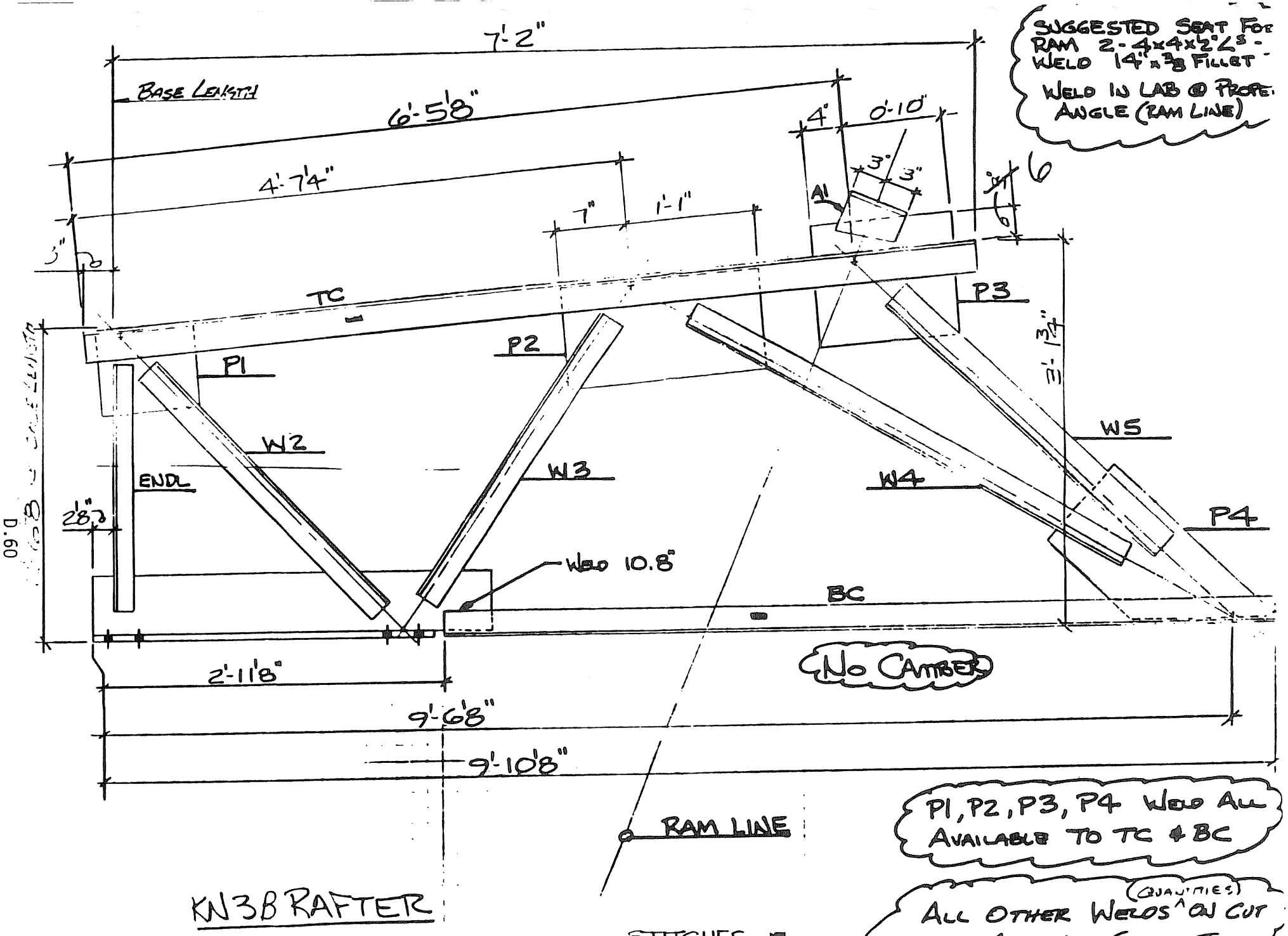

Figure D.35 Shop Details, Test KN-3B, Continued

HOLE SIZE 13/16" Ø
3½" GAGE

BOLT SIZE ¾" Ø

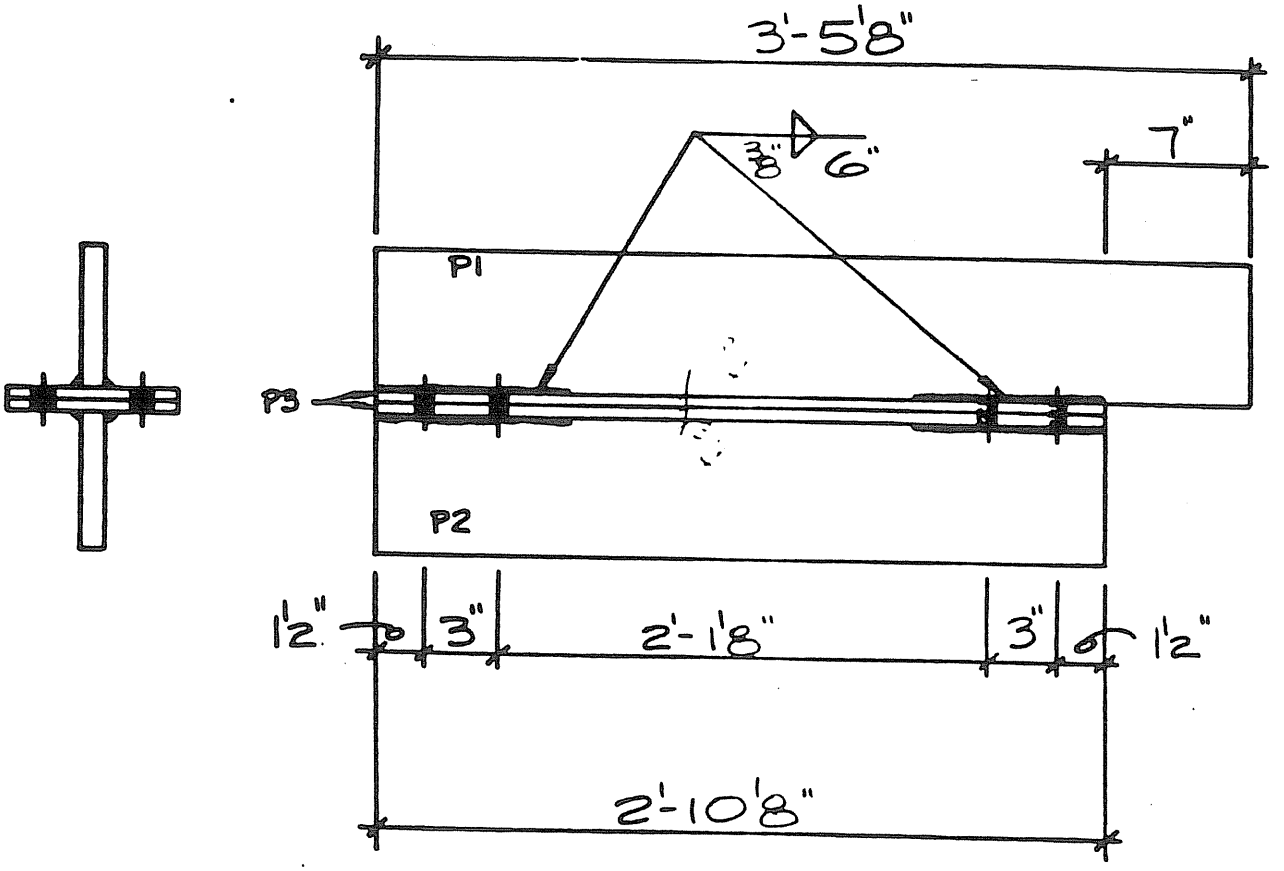

BOLT TOGETHER BEFORE WELDING

1 - P1 - 6x1" PL - 3'-5⅛" LONG
1 - P2 - 8x1" PL - 2'-10⅛" LONG
2 - P3 - 7x¾" PL - 2'-10⅛" LONG

Figure D.35 Shop Details, Test KN-3B, Continued

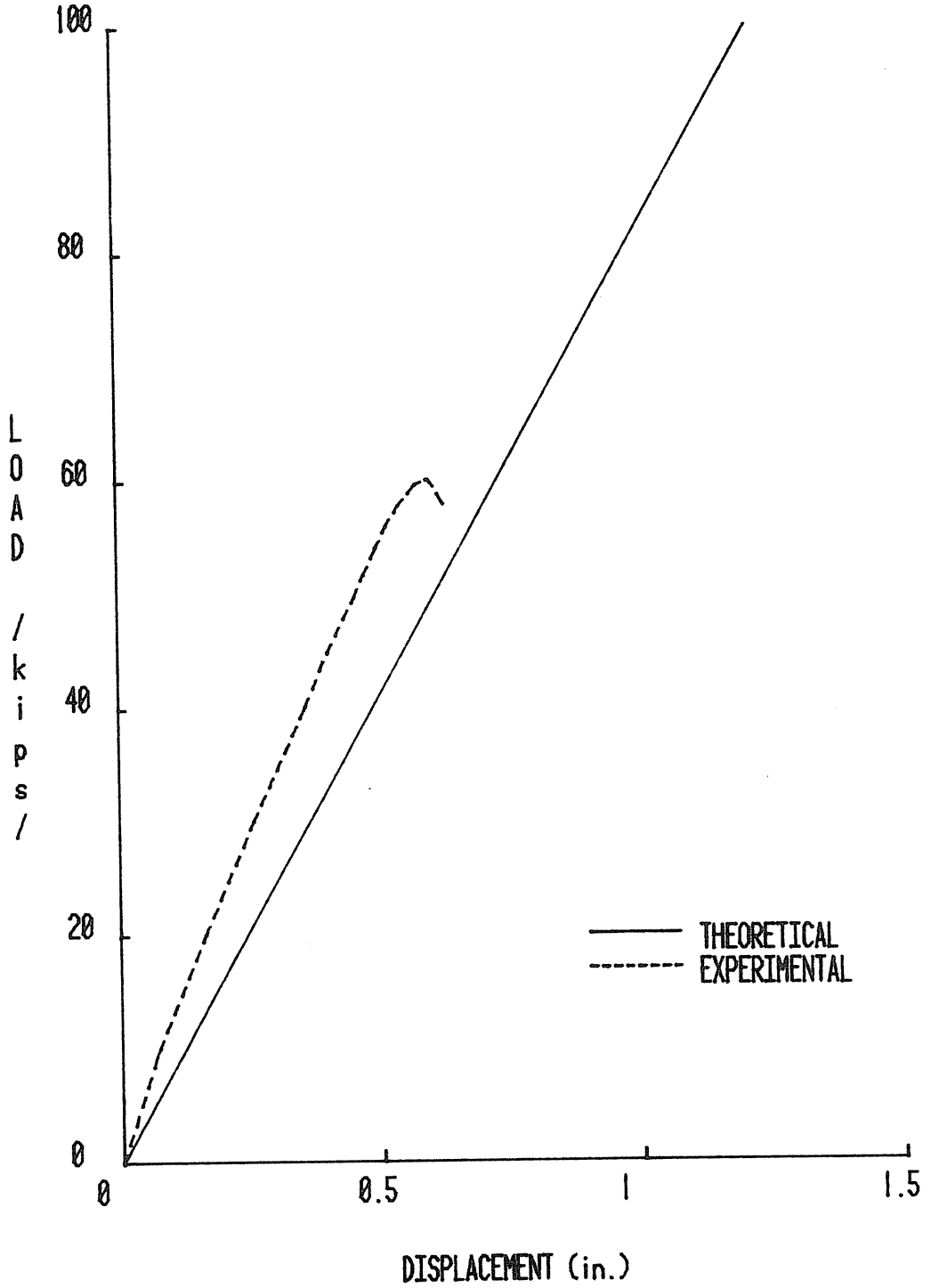

Figure D.36 Load vs. Displacement in Load Direction, KN-3B

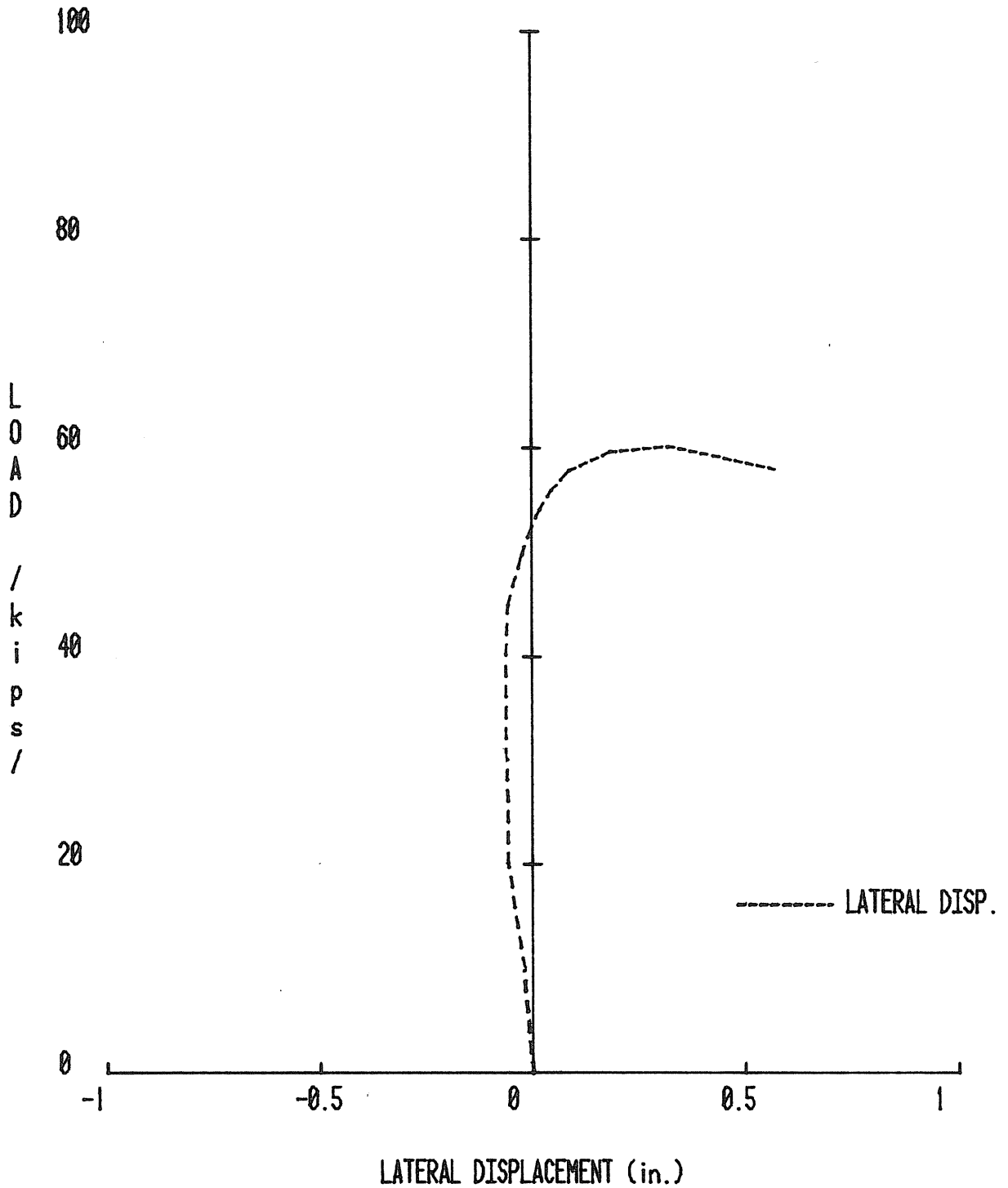

Figure D.37 Load vs. Lateral Displacement, KN-3B

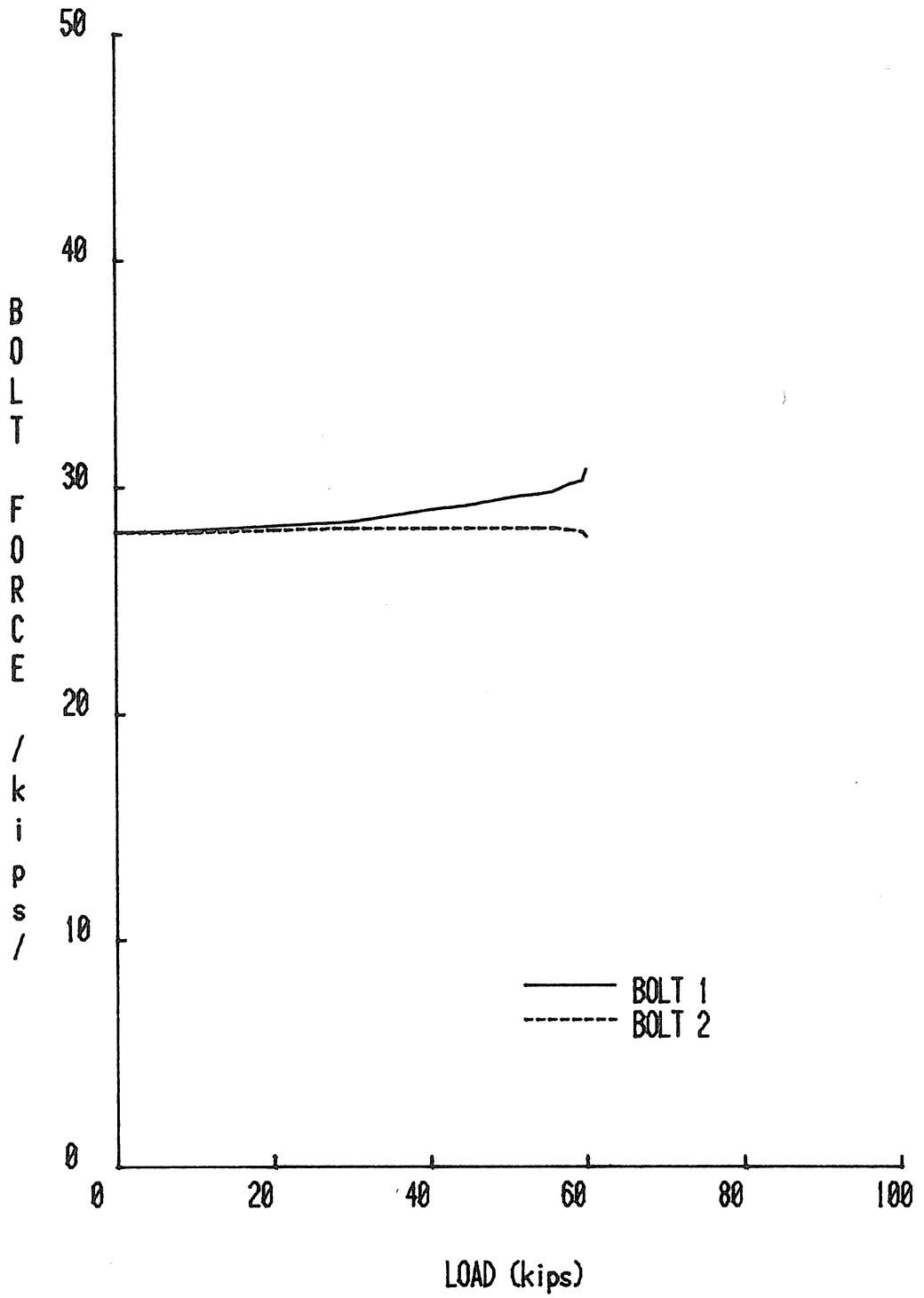

Figure D.38 Bolt Force vs. Load, KN-3B

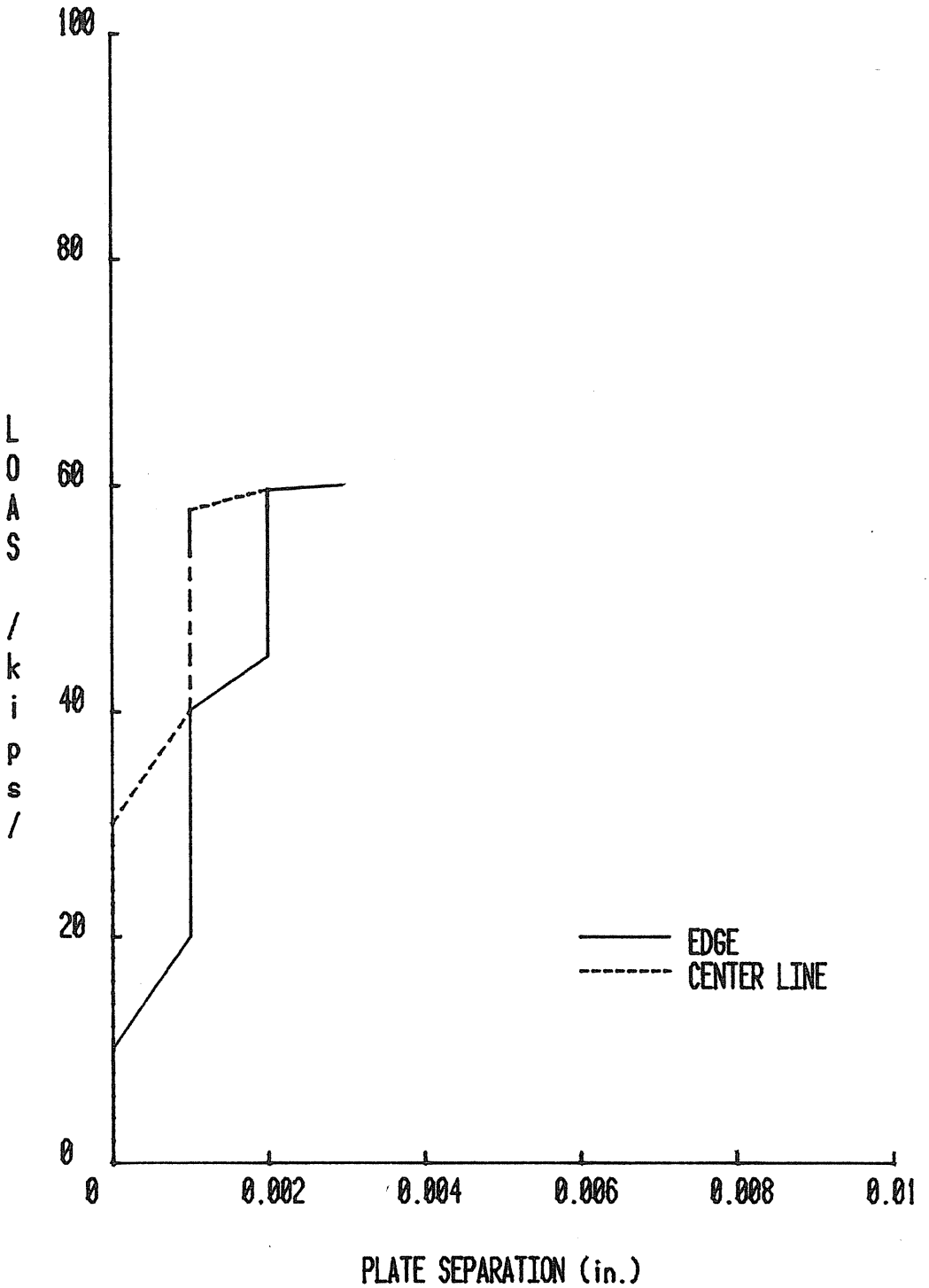

Figure D.39 Load vs. Plate Separation, KN-3B

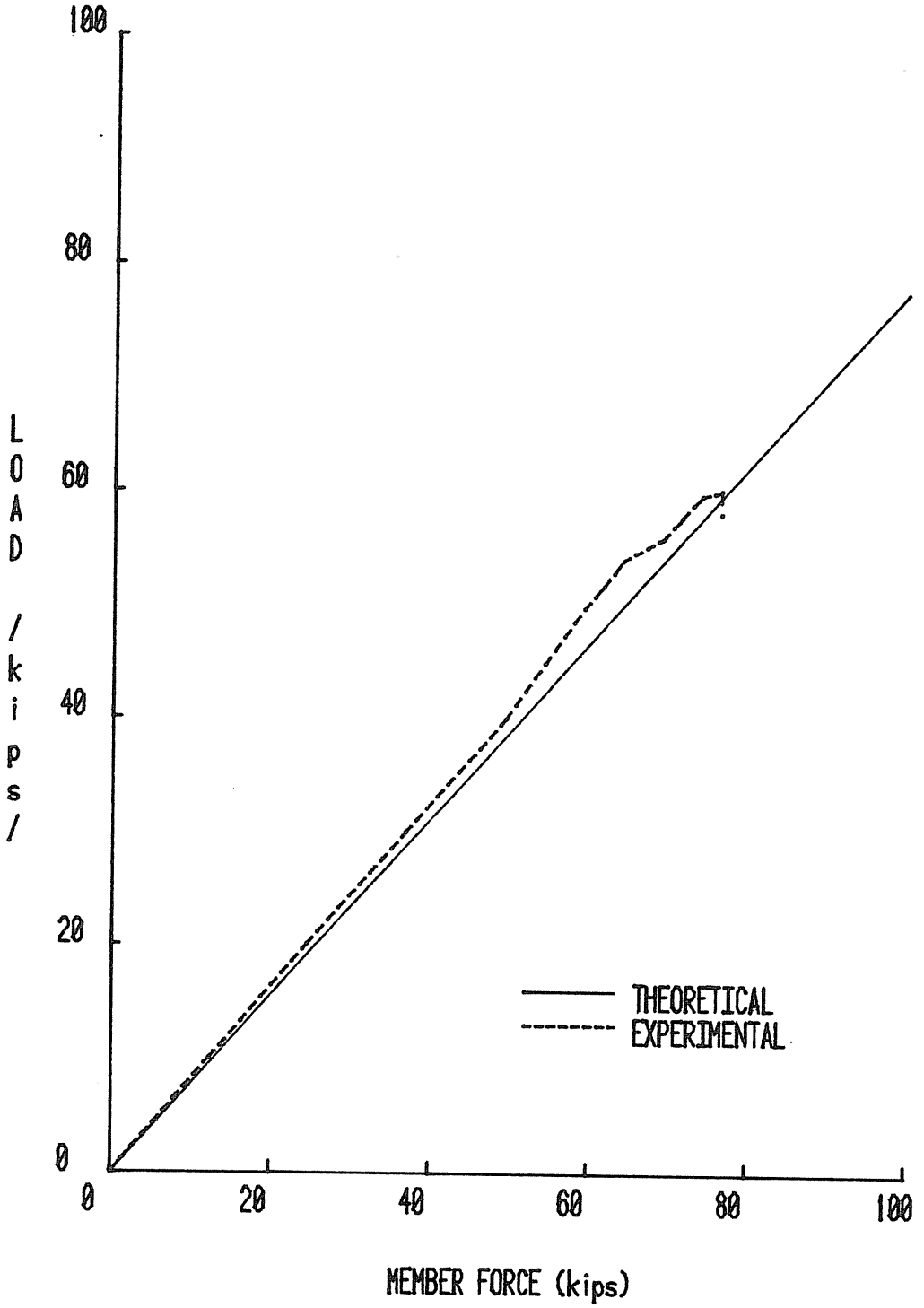

Figure D.40 Load vs. Member (#11) Force, KN-3B

VULCRAFT KNEE CONNECTION TEST SUMMARY

Project: VULCRAFT

Test No.: KN-4

Test Date: 5/9/84

Purpose: Study of Behavior of Knee Area

Knee Area Dimensions: 33.96 in. x 34.92 in.

Knee Diagonal: 48.71 in.

Splice Plate Dimensions:

Bolt Diameter: 1 in. No. of Bolts in Tension: 4

Pretension Force per Bolt: 51 kips

Failure Load: 109.60 kips

Failure Mode: Lateral buckling of stem plate and rupture of the weld

Predicted Failure Loads:

Method: VULCRAFT Analysis Load: 73.68x1.66 = 122.31 kips

Method: Load:

Method: Load:

Method: Load:

Maximum Displ. in Load Direction: 1.140 in. @ 109.6 kips

Maximum Plate Separation: 0.007 in. @ 109.6 kips

Discussion:

Observations:

-At 30 kips, yielding was detected on both sides of rafter stem web (compression region).

-At 50 kips, specimen was free from the vertical support and more yielding occurred on both sides of rafter and column stem web, (compression region).

-Bolt forces in tension bolts in east side were about 5% more than bolt forces in west side.

-At 105 kips, some yielding was detected in the first diagonal member of rafter.

-At 105 kips, base connections at support frame at ram end were deformed.

-At 105 kips, adjustments were made at ram end and specimen was reloaded.

-At 108 kips, severe yielding was observed at stem web plate, (compression region) of column.

Loading and Deformations:

-Maximum applied load was 109.60 kips.

-Maximum bolt force was 72.8 kips in west side tension bolt.

-Maximum axial strain in diagonal member (#69) was 0.00082 in./in. and in first rafter member (#70) was 0.00168 in./in. at ram load of 109.6 kips.

-Maximum lateral displacement of inner corner of knee was 0.651 in. to the west.

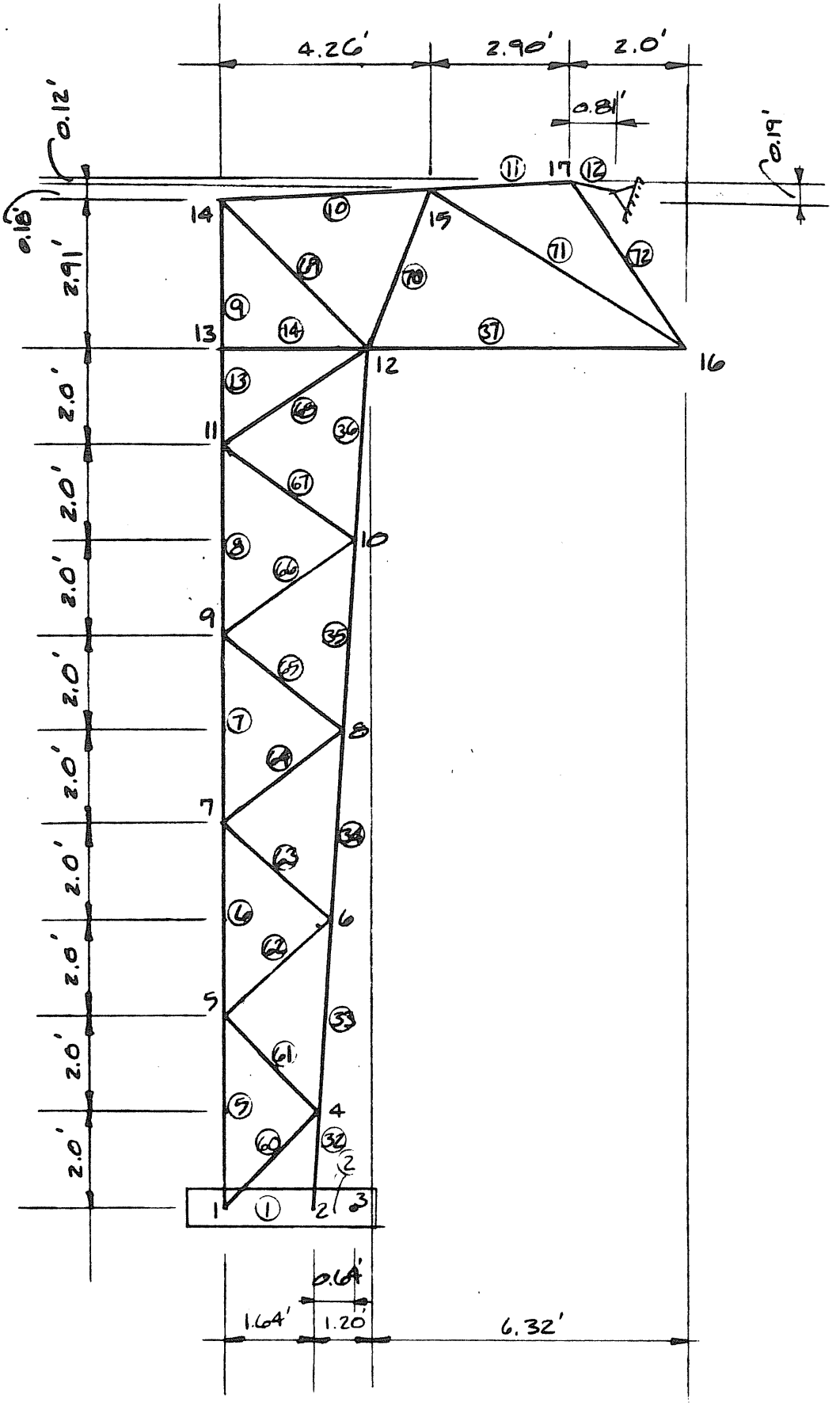

Figure D.41 Specimen Geometry, Test KN-4

Test KN-4
==========

Given:

```
tf=1.000 in.        (Thickness of flange in tee hanger)
a =1.750 in.        (Distance from bolt center to edge)
b =1.750 in.        (Distance from bolt center to  web)
p =3.000 in.        (Width of tee hanger per bolt line)
Fy=50.00 ksi        (Yield stress of  tee hanger plate)
Bolt type=A325            (Type of bolt.  A325 or A490)
db=1.000 in.                        (Diameter of Bolt)
B =69.11 kips.              (Ultimate capacity of bolt)
Fyb=88.00 kips.         (Yield stress of threaded bolt)
Ptb=48.38 kips.     (Pretension force in bolt=0.70 x B)
```

Solution:

According to the method outlined in Chapter 4 of the AISC Manual, the results are:

Service load capacity = 98.75 kips.
======

Service load capacity times 2.0=197.50 kips.
======

Predicted failure mode is plate yielding

Predicted bolt force at factored load= 60.14 kips
======

According to the method outlined in THE SPLIT-TEE ANALOGY IN BOLTED SPLICES AND BEAM-COLUMN CONNECTIONS, by Kennedy et al published in Joints in Structural Steelwork, John Wiley & Sons, NY ,1981, pp.2.138-2.157, the results are:

Elastic load capacity = 83.21 kips
======

Ultimate load capacity =140.98 kips
======

Predicted failure mode is plate yielding

Predicted bolt force at factored load= 48.38 kips
======

Figure D.42 AISC and Kennedy Analyses, Test KN-4

```
*************************************************************
                    STIFFNESS ANALYSIS
                         ØF
                    PLANE FRAMES
*************************************************************

 JOB NAME: VULCRAFT KN-4 FRAME, WORKING LOAD=73.68 KIPS


**** JOINT COORDINATES ****

JOINT    X-COORD    Y-COORD
         ( FT. )    ( FT. )

     1     0.000      0.000
     2     1.630      0.000
     3     2.270      0.000
     4     1.760      2.000
     5     0.000      4.000
     6     2.030      6.000
     7     0.000      8.000
     8     2.300     10.000
     9     0.000     12.000
    10     2.560     14.000
    11     0.000     16.000
    12     2.830     18.000
    13     0.000     18.000
    14     0.000     20.910
    15     4.260     21.090
    16     9.160     18.000
    17     7.160     21.210
    18     7.970     21.020


**** SUPPORT CONDITIONS ****

 SUPPORT  X-DIR.  Y-DIR.  Z-DIR.
      18       1       1       Ø
       3       1       1       Ø
```

Figure D.43 Stiffness Analysis, Test KN-4 ,

**** MEMBER INCIDENCES ****

MEMBER	I JOINT	J JOINT
1	1	2
2	2	3
5	1	5
6	5	7
7	7	9
8	9	11
9	13	14
10	14	15
11	15	17
12	17	18
13	11	13
14	12	13
32	2	4
33	4	6
34	6	8
35	8	10
36	10	12
37	12	16
60	1	4
61	4	5
62	5	6
63	6	7
64	7	8
65	8	9
66	9	10
67	10	11
68	11	12
69	12	14
70	12	15
71	15	16
72	16	17

Figure D.43 Stiffness Analysis, Test KN-4, Continued

**** MEMBER PROPERTIES ****

MEMBER	AREA (IN^2)	INERTIA (IN^4)	ELASTICITY (K/IN^2)
1	12.00	144.00	29000.0
2	12.00	144.00	29000.0
5	3.21	2.76	29000.0
6	3.21	2.76	29000.0
7	3.21	2.76	29000.0
8	3.21	2.76	29000.0
9	3.21	2.76	29000.0
10	8.38	20.00	29000.0
11	8.38	20.00	29000.0
12	100.00	0.00	29000.0
13	3.21	2.76	29000.0
14	30.00	362.00	29000.0
32	6.62	9.94	29000.0
33	6.62	9.94	29000.0
34	6.62	9.94	29000.0
35	6.62	9.94	29000.0
36	6.62	9.94	29000.0
37	6.62	9.94	29000.0
60	0.83	0.18	29000.0
61	0.67	0.27	29000.0
62	0.67	0.27	29000.0
63	0.53	0.21	29000.0
64	0.63	0.26	29000.0
65	0.37	0.08	29000.0
66	0.57	0.24	29000.0
67	0.75	0.16	29000.0
68	0.75	0.16	29000.0
69	6.62	9.94	29000.0
70	3.56	3.02	29000.0
71	6.62	9.94	29000.0
72	4.58	5.32	29000.0

Figure D.43 Stiffness Analysis, Test KN-4, Continued

**** LOADING 1 **** DL+LL

** JOINT LOADS **

JOINT	FORCE X (K)	FORCE Y (K)	MOMENT Z (FT-K)
1	0.00	0.00	0.00
2	0.00	0.00	0.00
3	0.00	0.00	0.00
4	0.00	0.00	0.00
5	0.00	0.00	0.00
6	0.00	0.00	0.00
7	0.00	0.00	0.00
8	0.00	0.00	0.00
9	0.00	0.00	0.00
10	0.00	0.00	0.00
11	0.00	0.00	0.00
12	0.00	0.00	0.00
13	0.00	0.00	0.00
14	0.00	0.00	0.00
15	0.00	0.00	0.00
16	0.00	0.00	0.00
17	-16.55	-71.80	0.00
18	0.00	0.00	0.00

Figure D.43 Stiffness Analysis, Test KN-4, Continued

```
************************
* RESULTS OF ANALYSIS *
************************
```

JOB NAME: VULCRAFT KN-4 FRAME, WORKING LOAD=73.68 KIPS LOADING 1 DL+LL

***** JOINT DISPLACEMENTS *****

JOINT	X-DIR. (IN)	Y-DIR. (IN)	Z-DIR. (RAD)
1	-0.0009	-0.1740	0.0056
2	-0.0004	-0.0556	0.0069
3	0.0000	0.0000	0.0074
4	-0.1613	-0.0578	0.0063
5	-0.3013	-0.1540	0.0055
6	-0.4123	-0.0710	0.0040
7	-0.4981	-0.1248	0.0028
8	-0.5493	-0.0960	0.0017
9	-0.5825	-0.0885	0.0002
10	-0.5748	-0.1315	-0.0010
11	-0.5252	-0.0465	-0.0024
12	-0.4464	-0.1799	-0.0047
13	-0.4464	-0.0233	-0.0046
14	-0.2107	0.0092	-0.0062
15	-0.1788	-0.3404	-0.0094
16	-0.4712	-0.8845	-0.0087
17	-0.1706	-0.7273	-0.0111
18	0.0000	0.0000	0.1178

***** REACTIONS *****

JOINT	FORCE X (K)	FORCE Y (K)	MOMENT Z (FT-K)
18	-0.003	0.002	0.000
3	16.553	71.798	0.000

Figure D.43 Stiffness Analysis, Test KN-4, Continued

***** MEMBER END ACTIONS -- LOCAL COORDINATES *****

MEMBER	JOINT	AXIAL (K)	SHEAR (K)	MOMENT (FT-K)
1	1	-9.58	28.45	0.58
	2	9.58	-28.45	45.79
2	2	-16.55	-71.80	-45.95
	3	16.55	71.80	0.00
5	1	-38.99	-0.29	-0.56
	5	38.99	0.29	-0.60
6	5	-56.61	0.03	0.42
	7	56.61	-0.03	-0.31
7	7	-70.44	-0.09	0.18
	9	70.44	0.09	-0.54
8	9	-81.61	0.04	0.45
	11	81.61	-0.04	-0.29
9	13	-86.76	1.06	1.86
	14	86.76	-1.06	1.22
10	14	-81.18	-2.60	-2.54
	15	81.18	2.60	-8.54
11	15	54.49	4.92	9.46
	17	-54.49	-4.92	4.82
12	17	0.00	0.00	0.00
	18	0.00	0.00	0.00
13	11	-89.96	-0.36	0.23
	13	89.96	0.36	-0.95
14	12	1.42	-3.21	-8.18
	13	-1.42	3.21	-0.90
32	2	100.49	-0.45	0.16
	4	-100.49	0.45	-1.07
33	4	120.33	-0.08	0.99
	6	-120.33	0.08	-1.33
34	6	136.10	0.04	1.21
	8	-136.10	-0.04	-1.06
35	8	148.38	-0.17	0.98
	10	-148.38	0.17	-1.67
36	10	158.33	-0.15	1.56
	12	-158.33	0.15	-2.18

Figure D.43 Stiffness Analysis, Test KN-4, Continued

37	12	62.62	1.54	6.14
	16	-62.62	-1.54	3.62
60	1	14.05	-0.01	-0.03
	4	-14.05	0.01	-0.01
61	4	-12.29	0.06	0.09
	5	12.29	-0.06	0.06
62	5	11.84	0.06	0.11
	6	-11.84	-0.06	0.05
63	6	-10.49	0.03	0.06
	7	10.49	-0.03	0.03
64	7	9.76	0.05	0.10
	8	-9.76	-0.05	0.06
65	8	-8.85	0.01	0.02
	9	8.85	-0.01	0.01
66	9	8.66	0.04	0.07
	10	-8.66	-0.04	0.04
67	10	-7.35	0.03	0.06
	11	7.35	-0.03	0.03
68	11	6.58	0.00	0.03
	12	-6.58	0.00	-0.01
69	12	113.61	1.02	2.83
	14	-113.61	-1.02	1.32
70	12	83.90	0.33	1.41
	15	-83.90	-0.33	-0.27
71	15	-118.49	-0.14	-0.65
	16	118.49	0.14	-0.15
72	16	74.78	-2.19	-3.47
	17	-74.78	2.19	-4.82

Figure D.43 Stiffness Analysis, Test KN-4, Continued

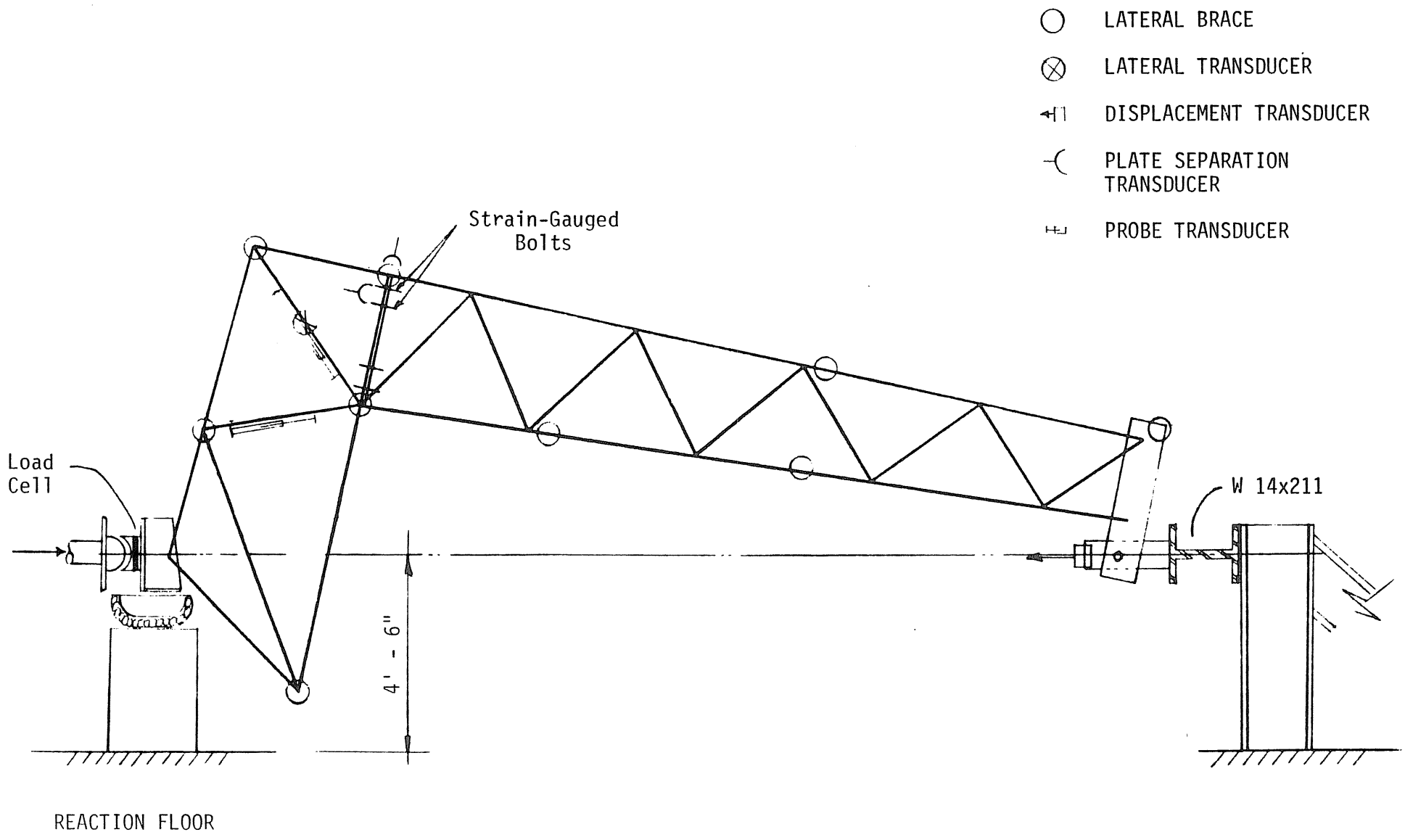

Figure D.44 Test Setup, Test KN-4

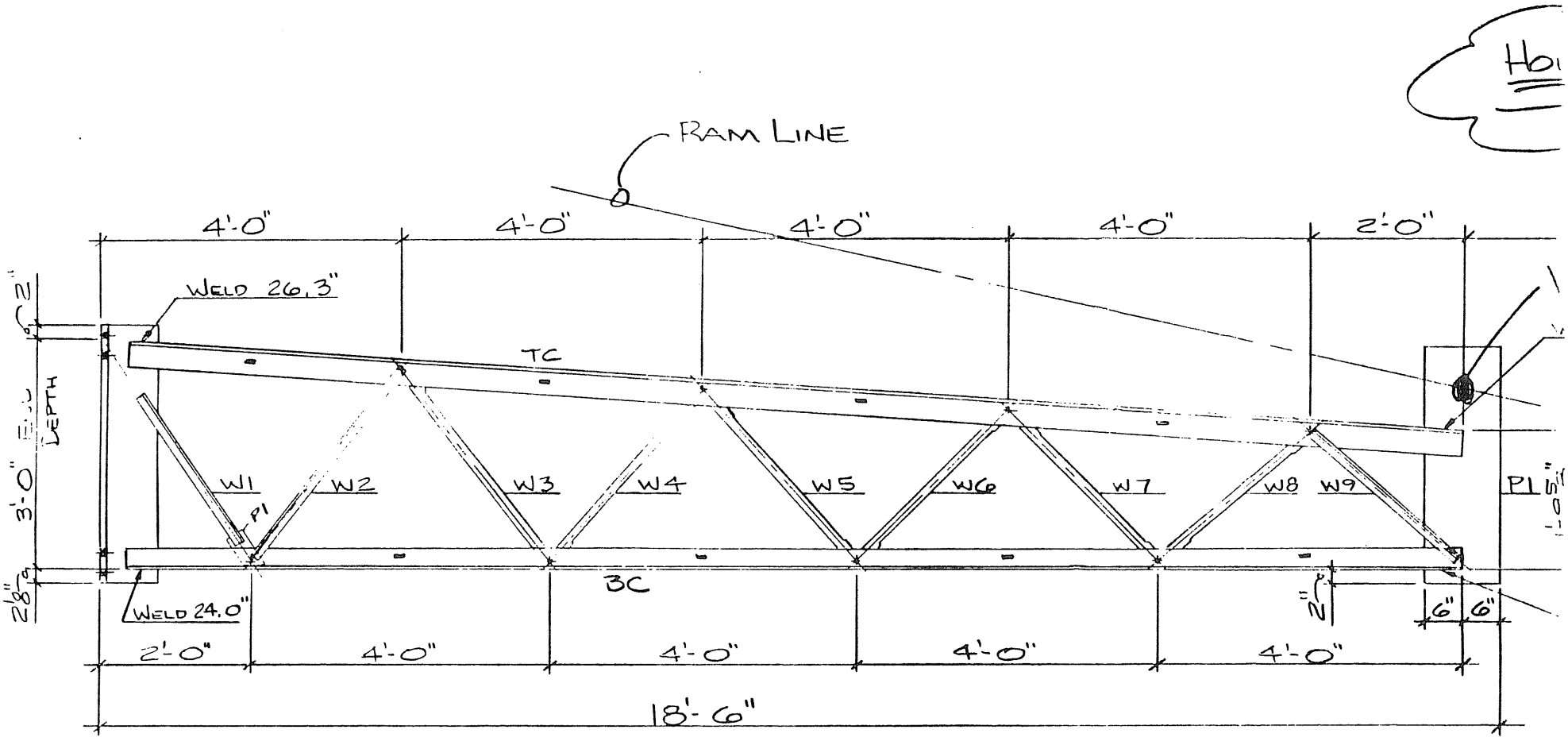

2- TC- SEC. 61 - 17'-8½"
2- BC- SEC. 46- 17'-8"

2- W1- SEC. 16 - 2'-4" WELD 6.0"
2- W2- SEC. 16- 3'-2" WELD 4.1"
1- W3 - SEC. 23- 3'-3" WELD 4.6"
1- W4 - SEC. 16- 3'-0" WELD 4.7"
1- W5 - SEC. 25- 3'-0" WELD 5.0"

1- W6- SEC. 22- 2'-10" WELD 5.5"
1- W7- SEC. 26- 2'-10" WELD 5.4"
1- W8- SEC. 26- 2'-8" WELD 5.7"
2- W9- SEC. 18 - 2'-6" WELD 7.3"

1-

Figure D.45 Shop Details, Test KN-4

Pc. PL 1x 6x 10'-0

2- TC - SEC. 64 - 8'-2¾"
2- BC - SEC. 61 - 9'-11⅛"

(SLOT) 2- ENDL - SEC. 46 - 2'-3½" WELD
2- W2 - SEC. 61 - 3'-1" WELD
2- W3 - SEC. 48 - 2'-7½" WELD
2- W4 - SEC. 61 - 4'-0" WELD
2- W5 - SEC. 54 - 2'-9½" WELD

1- P1 - 12x1" PL x 1'-3"
1- P2 - 12x1" PL x 1'-10"
1- P3 - 12x1" PL x 1'-3"
1- P4 - 12x1" PL x 1'-8"
} WELD ALL TO TC

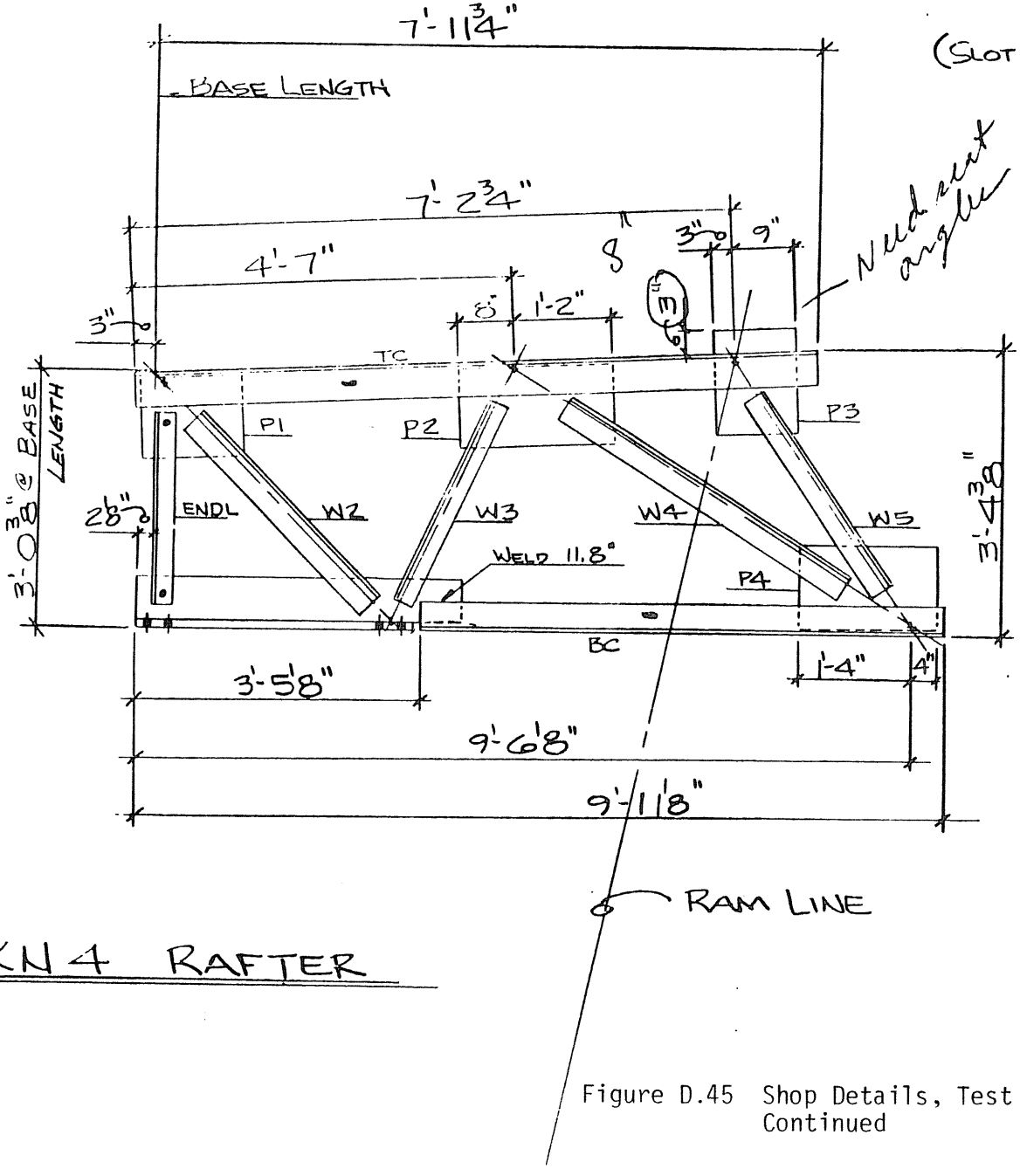

STITCHES -

No CAMBER

HOLD ALL WELD QUA

KN 4 RAFTER

D.80

Figure D.45 Shop Details, Test KN-4, Continued

HOLE SIZE 1 1/16" Ø
4 1/2" GAGE

BOLT SIZE 1" Ø

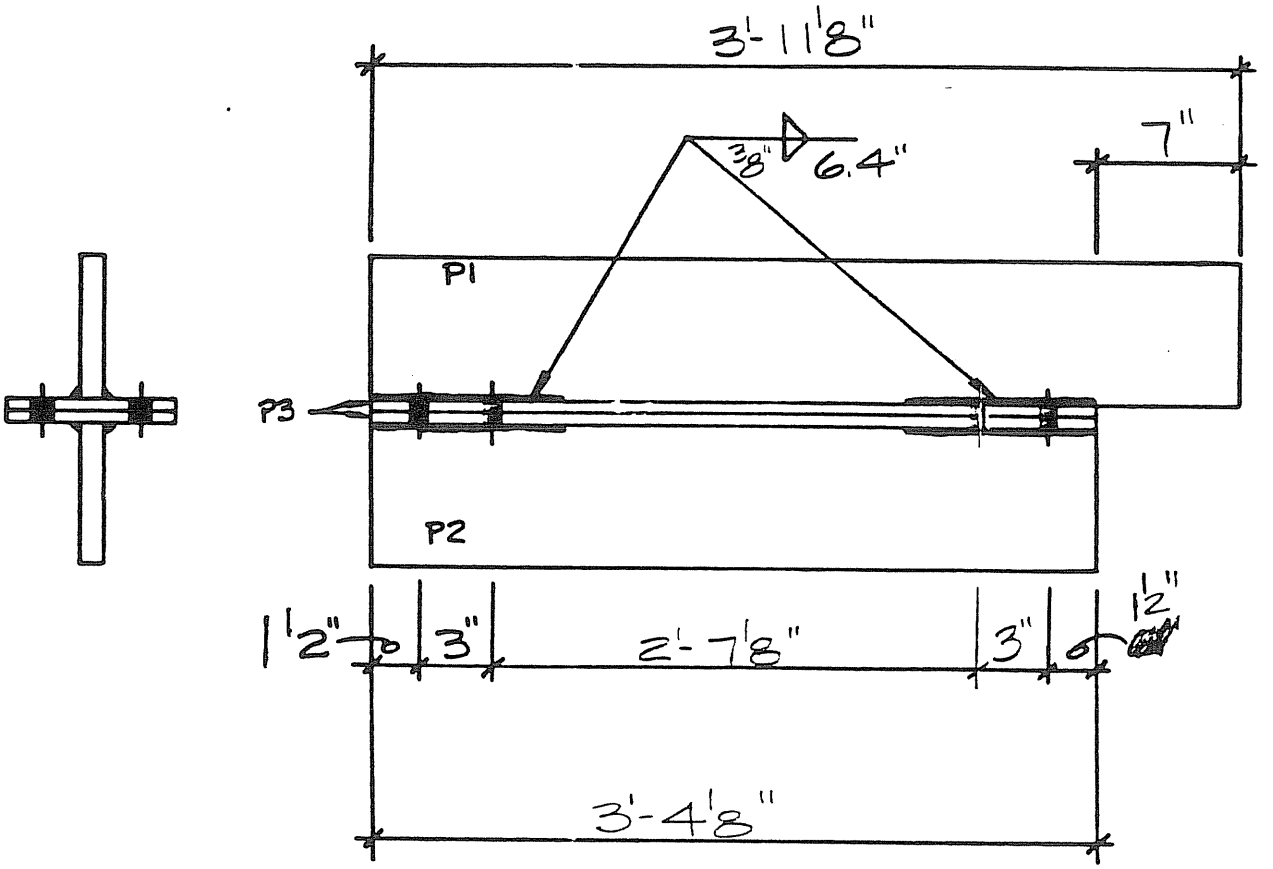

BOLT TOGETHER BEFORE WELDING

1 - P1 - 6x1" PL - 3'-11 1/8" LONG
1 - P2 - 8x1" PL - 3'-4 1/8" LONG
2 - P3 - 8x1" PL - 3'-4 1/8" LONG

Figure D.45 Shop Details, Test KN-4, Continued

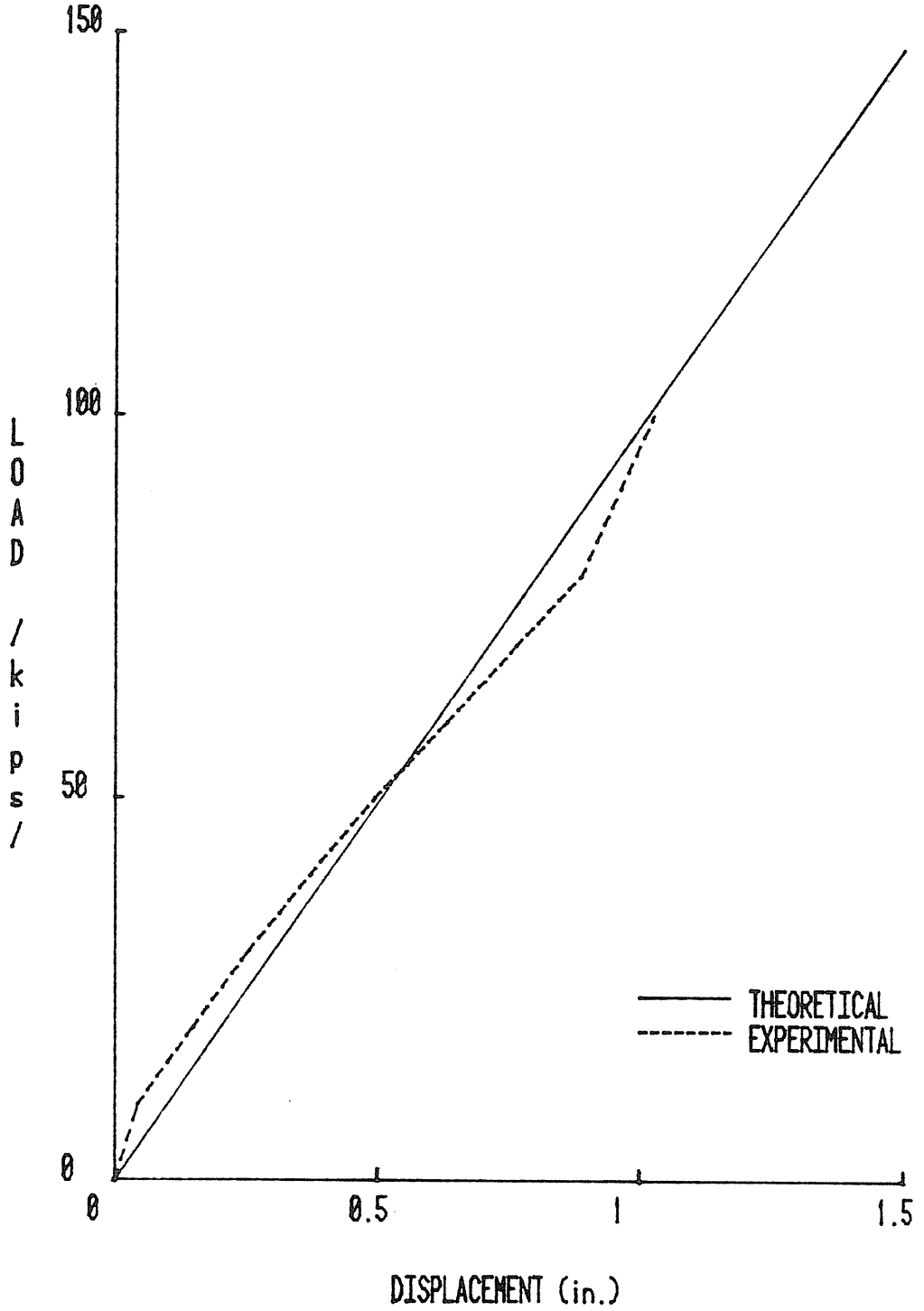

Figure D.46 Load vs. Displ. in Load Direction, KN-4

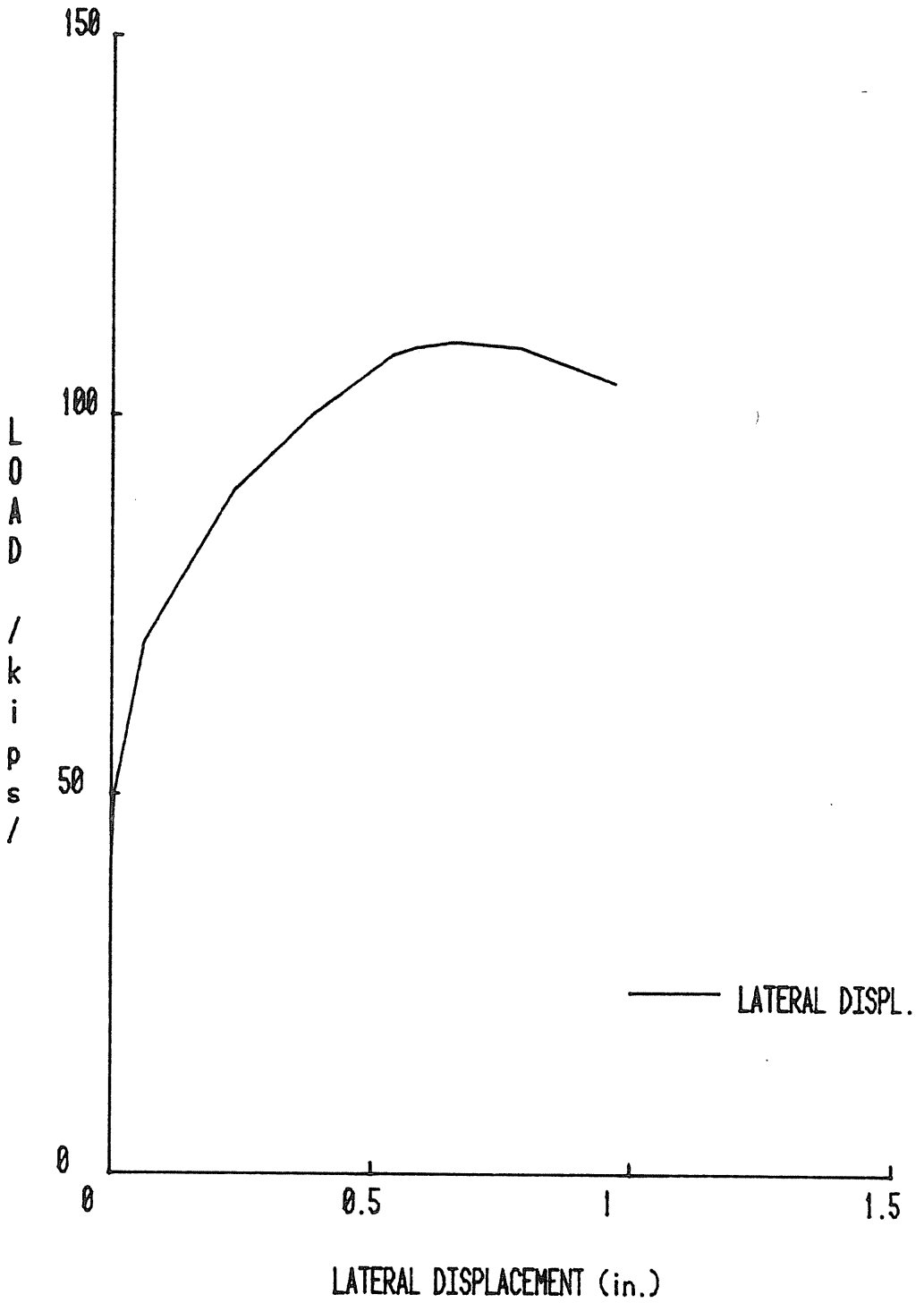

Figure D.47 Load vs. Lateral Displacement, KN-4

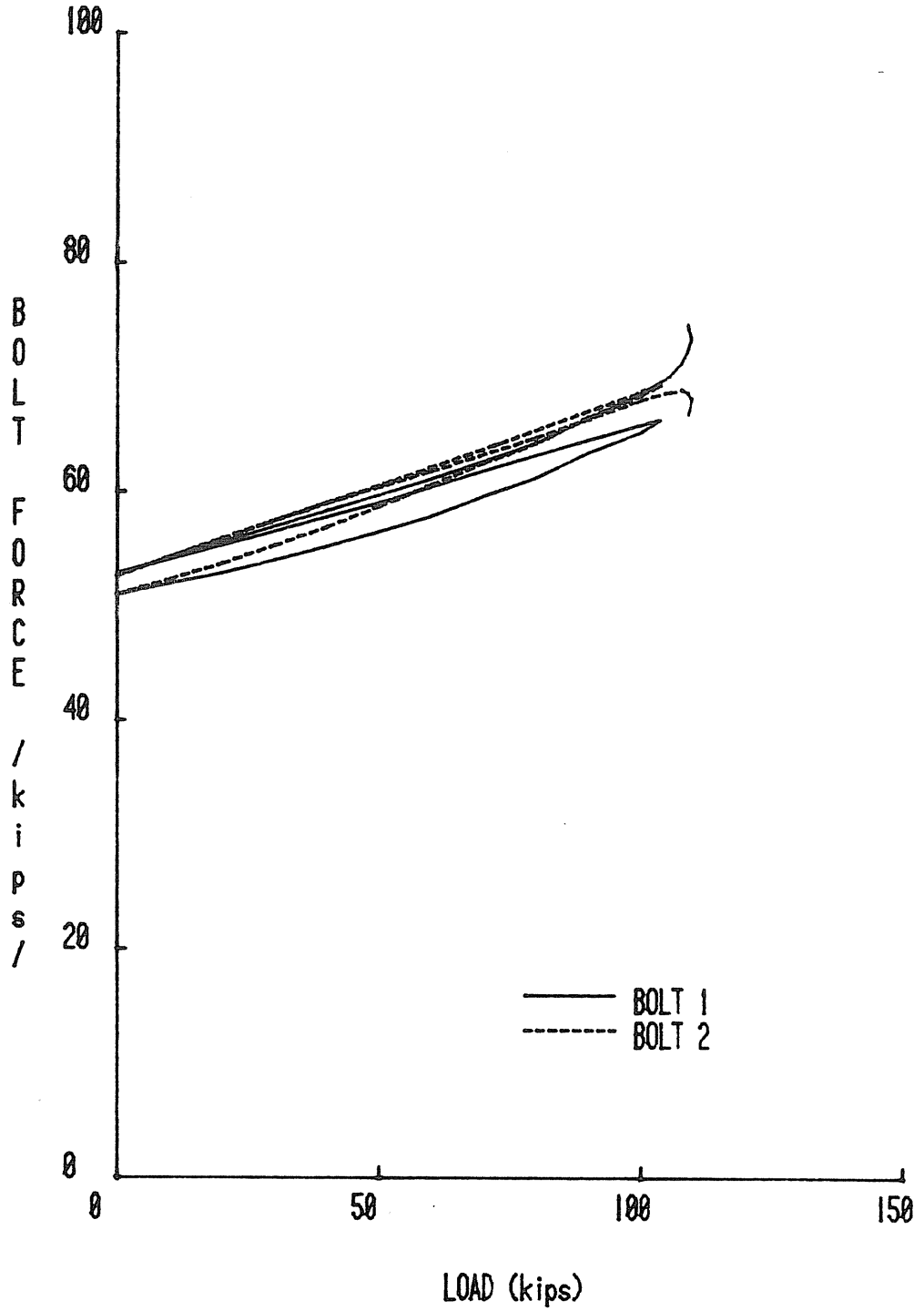

Figure D.48 Bolt Force vs. Load, KN-4

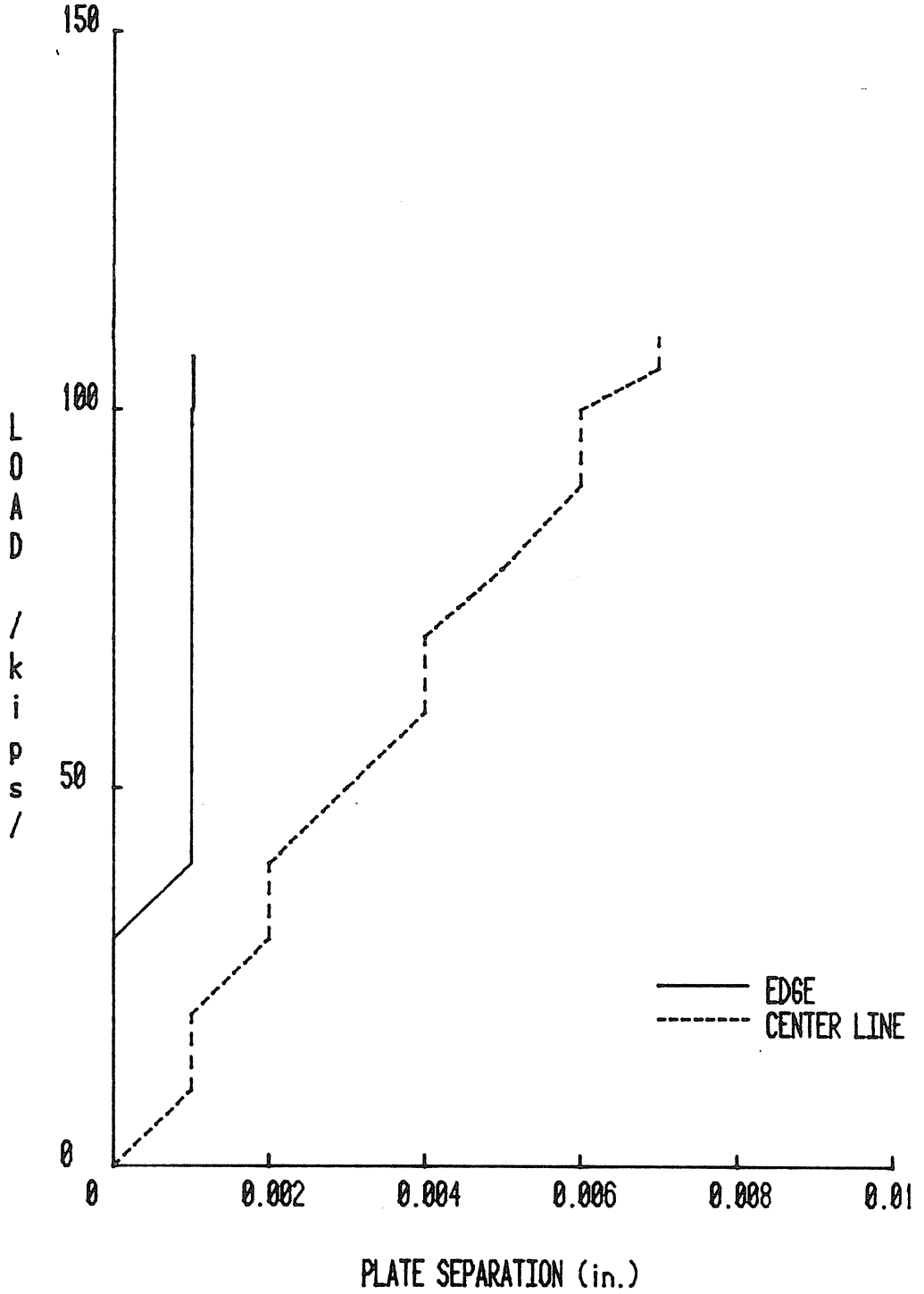

Figure D.49 Load vs. Plate Separation, KN-4

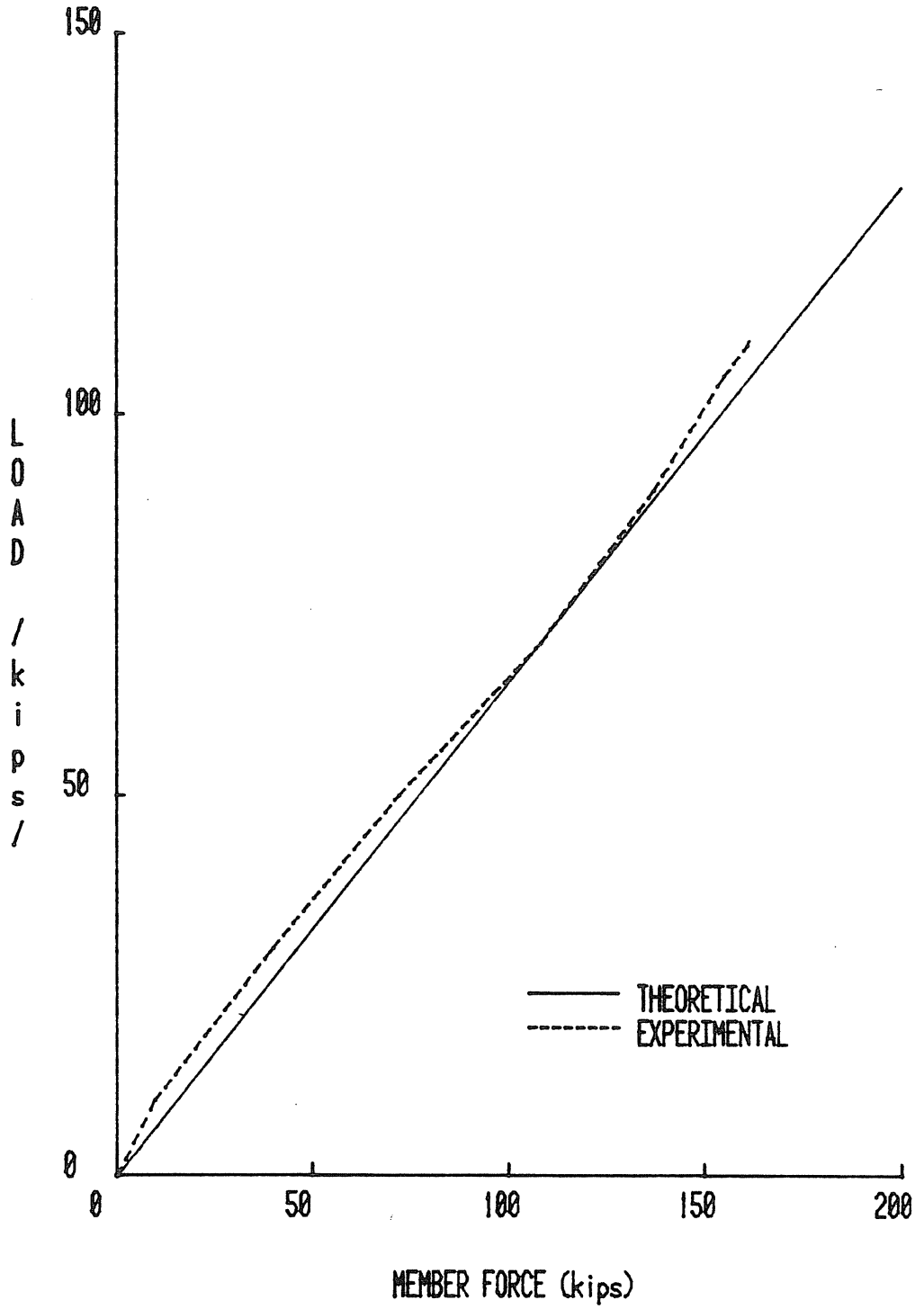

Figure D.50 Load vs. Member (#69) Force, KN-4

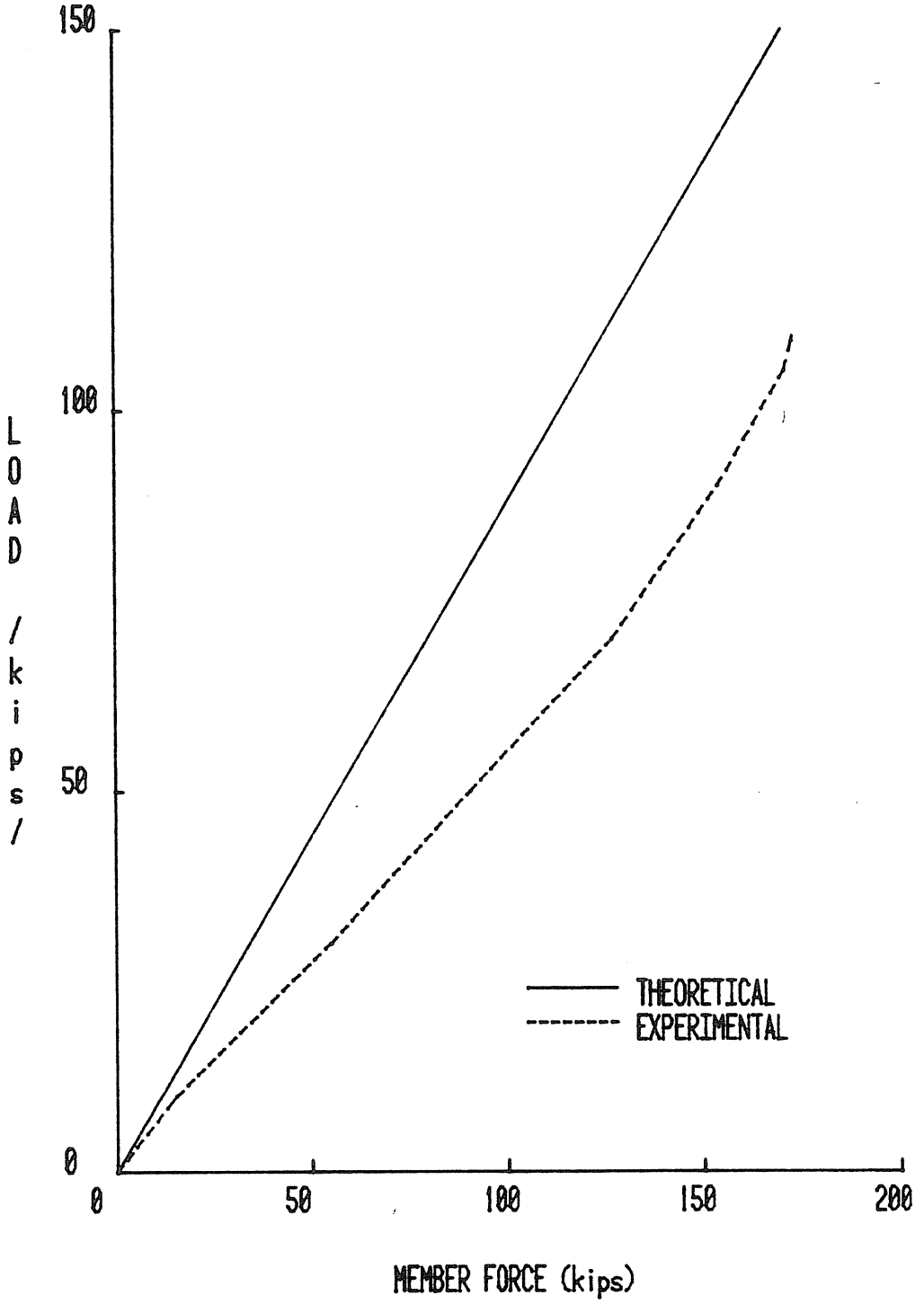

Figure D.51 Load vs. Member (#70) Force, KN-4

VULCRAFT KNEE CONNECTION TEST SUMMARY

Project: VULCRAFT

Test No.: KN-5

Test Date: 4/20/84

Purpose: Study of Behavior of Knee Area

Knee Area Dimensions: 34.44 in. x 42.36 in.

Knee Diagonal: 2Ls 4x4x0.375 54.6 in.

Splice Plate Dimensions: —

Bolt Diameter: 1 in. No. of Bolts in Tension: 4

Pretension Force per Bolt: 51 kips

Failure Load: 80 kips (ram load)

Failure Mode: Out-of-plane buckling of first diagonal of rafter (#56)

Predicted Failure Loads:

Method: Vulcraft Analysis Load: 58.16x1.66 = 96.54 kips

Method: Load:

Method: Load:

Method: Load:

Maximum Displ. in Load Direction: 1.394 in. @ 79.88 kips

Maximum Plate Separation: 0.005 in. @ 79.88 kips

Discussion:

Observations:

-At 25 kips, yielding was detected at compression region of rafter stem plate.

-At 35 kips, yielding was detected at tension region of column stem plate, close to tension bolts.

-At 65 kips, run out ram stroke, adjustment was made and test restarted.

-At 70 kips, yielding started around the batten angle of members #55 and #56. Further loading caused out-of-plane buckling of first diagonal member of the rafter.

Loading and Deformations:

-Maximum applied load was 80 kips.

-Maximum bolt force was 60.7 kips in west side bolt.

-Maximum axial strain in diagonal member (#55) was 0.00087 in./in. and in first rafter member (#56) was 0.00182 in./in. at ram load of 79.7 kips.

-Maximum lateral displacement of diagonal member was 0.73 in. to the east.

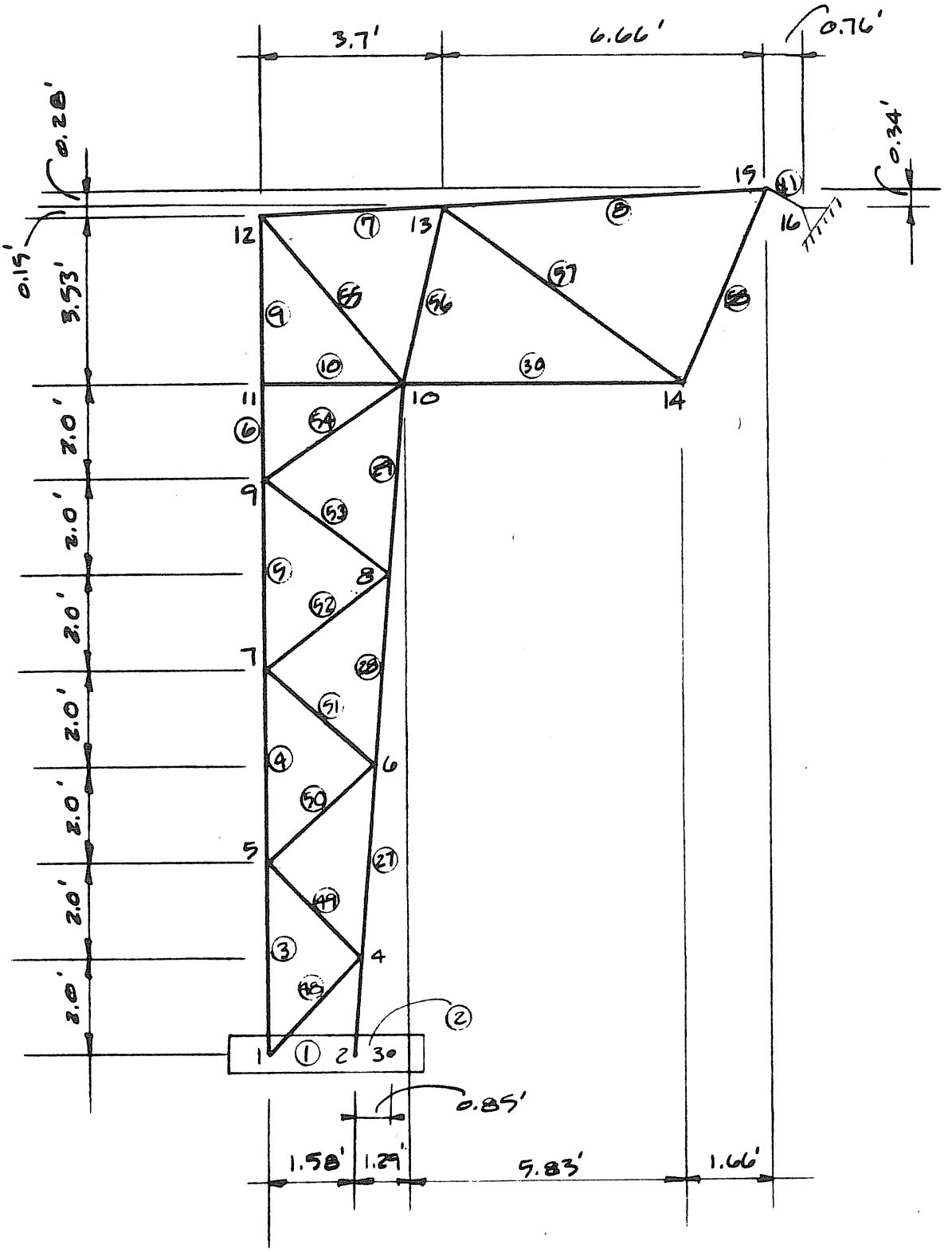

Figure D.52 Specimen Geometry, Test KN-5

Test KN-5
==========

Given:
---

tf=1.000 in.	(Thickness of flange in tee hanger)
a =2.000 in.	(Distance from bolt center to edge)
b =1.500 in.	(Distance from bolt center to web)
p =3.000 in.	(Width of tee hanger per bolt line)
Fy=50.00 ksi	(Yield stress of tee hanger plate)
Bolt type=A325	(Type of bolt. A325 or A490)
db=1.000 in.	(Diameter of Bolt)
B =69.11 kips.	(Ultimate capacity of bolt)
Fyb=88.00 kips.	(Yield stress of threaded bolt)
Ptb=48.38 kips.	(Pretension force in bolt=0.70 x B)

Solution:

According to the method outlined in Chapter 4 of the AISC Manual, the results are:

Service load capacity =123.44 kips.
======

Service load capacity times 2.0=246.88 kips.
======

Predicted failure mode is plate yielding

Predicted bolt force at factored load= 71.41 kips
======

According to the method outlined in THE SPLIT-TEE ANALOGY IN BOLTED SPLICES AND BEAM-COLUMN CONNECTIONS, by Kennedy et al published in Joints in Structural Steelwork, John Wiley & Sons, NY ,1981, pp.2.138-2.157, the results are:

Elastic load capacity = 96.08 kips
======

Ultimate load capacity =157.80 kips
======

Predicted failure mode is plate yielding

Predicted bolt force at factored load= 48.38 kips
======

Figure D.53 AISC and Kennedy Analyses, Test KN-5

```
*************************************************************
                    STIFFNESS ANALYSIS
                         ØF
                     PLANE FRAMES
*************************************************************

 JOB NAME: VULCRAFT KN-5 FRAME, WORKING LOAD=58.2 KIPS


**** JOINT COORDINATES ****

JOINT    X-COORD    Y-COORD
         ( FT. )    ( FT. )

    1      Ø.ØØØ      Ø.ØØØ
    2      1.58Ø      Ø.ØØØ
    3      2.43Ø      Ø.ØØØ
    4      1.76Ø      2.ØØØ
    5      Ø.ØØØ      4.ØØØ
    6      2.13Ø      6.ØØØ
    7      Ø.ØØØ      6.ØØØ
    8      2.5ØØ     1Ø.ØØØ
    9      Ø.ØØØ     12.ØØØ
   1Ø      2.57Ø     14.ØØØ
   11      Ø.ØØØ     14.ØØØ
   12      Ø.ØØØ     17.53Ø
   13      3.7ØØ     17.68Ø
   14      8.7ØØ     14.ØØØ
   15     1Ø.36Ø     17.96Ø
   16     11.12Ø     17.62Ø


**** SUPPORT CONDITIONS ****

 SUPPORT   X-DIR.   Y-DIR.   Z-DIR.
       3        1        1        Ø
      16        1        1        Ø
```

Figure D.54 Stiffness Analysis, Test KN-5,

**** MEMBER PROPERTIES ****

MEMBER	AREA (IN^2)	INERTIA (IN^4)	ELASTICITY (K/IN^2)
1	12.00	144.00	29000.0
2	12.00	144.00	29000.0
3	3.21	2.76	29000.0
4	3.21	2.76	29000.0
5	3.21	2.76	29000.0
6	3.21	2.76	29000.0
7	6.62	9.94	29000.0
8	6.62	9.94	29000.0
9	3.21	2.76	29000.0
10	36.00	892.00	29000.0
11	100.00	0.00	29000.0
26	5.72	8.72	29000.0
27	5.72	8.72	29000.0
28	5.72	8.72	29000.0
29	5.72	8.72	29000.0
30	4.58	5.32	29000.0
48	1.06	0.41	29000.0
49	0.75	0.16	29000.0
50	0.83	0.18	29000.0
51	0.72	0.27	29000.0
52	0.75	0.16	29000.0
53	0.75	0.16	29000.0
54	0.75	0.16	29000.0
55	5.72	8.72	29000.0
56	2.37	1.41	29000.0
57	3.56	3.02	29000.0
58	3.21	2.76	29000.0

Figure D.54 Stiffness Analysis, Test KN-5, Continued

**** LOADING 1 **** DL+LL

** JOINT LOADS **

JOINT	FORCE X (K)	FORCE Y (K)	MOMENT Z (FT-K)
1	0.00	0.00	0.00
2	0.00	0.00	0.00
3	0.00	0.00	0.00
4	0.00	0.00	0.00
5	0.00	0.00	0.00
6	0.00	0.00	0.00
7	0.00	0.00	0.00
8	0.00	0.00	0.00
9	0.00	0.00	0.00
10	0.00	0.00	0.00
11	0.00	0.00	0.00
12	0.00	0.00	0.00
13	0.00	0.00	0.00
14	0.00	0.00	0.00
15	-23.51	-53.24	0.00
16	0.00	0.00	0.00

Figure D.54 Stiffness Analysis, Test KN-5, Continued

```
************************
* RESULTS OF ANALYSIS *
************************
```

JOB NAME: VULCRAFT KN-5 FRAME, WORKING LOAD=58.2 KIPS LOADING 1 DL+LL

***** JOINT DISPLACEMENTS *****

JOINT	X-DIR. (IN)	Y-DIR. (IN)	Z-DIR. (RAD)
1	-0.0015	-0.2135	0.0065
2	-0.0007	-0.0831	0.0077
3	0.0000	0.0000	0.0084
4	-0.1901	-0.0782	0.0076
5	-0.3592	-0.1897	0.0067
6	-0.4944	-0.0834	0.0048
7	-0.5938	-0.1522	0.0031
8	-0.6611	-0.1079	0.0020
9	-0.6850	-0.1049	0.0007
10	-0.6771	-0.1511	-0.0022
11	-0.6770	-0.0779	-0.0021
12	-0.4634	-0.0312	-0.0050
13	-0.4358	-0.2447	-0.0062
14	-0.7259	-0.7446	-0.0092
15	-0.4081	-0.9121	-0.0083
16	0.0000	0.0000	0.1542

***** REACTIONS *****

JOINT	FORCE X (K)	FORCE Y (K)	MOMENT Z (FT-K)
3	23.466	53.156	0.000
16	0.044	0.084	0.000

Figure D.54 Stiffness Analysis, Test KN-5 , Continued

*** MEMBER END ACTIONS -- LOCAL COORDINATES *****

MEMBER	JOINT	AXIAL (K)	SHEAR (K)	MOMENT (FT-K)
1	1	-14.99	29.70	0.82
	2	14.99	-29.70	46.11
2	2	-23.47	-53.16	-45.18
	3	23.47	53.16	0.00
3	1	-46.29	-0.36	-0.75
	5	46.29	0.36	-0.68
4	5	-72.71	0.02	0.53
	7	72.71	-0.02	-0.46
5	7	-91.80	0.02	0.37
	9	91.80	-0.02	-0.30
6	9	-104.92	-0.59	0.20
	11	104.92	0.59	-1.38
7	12	-81.77	-1.37	-1.86
	13	81.77	1.37	-3.22
8	13	0.77	0.59	2.58
	15	-0.77	-0.59	1.35
9	11	-102.73	0.80	1.87
	12	102.73	-0.80	0.96
10	10	1.39	-2.19	-5.79
	11	-1.39	2.19	-0.49
11	15	-0.01	-0.09	-0.08
	16	0.01	0.09	0.00
26	2	83.28	-1.01	-0.93
	4	-83.28	1.01	-1.11
27	4	114.21	-0.10	1.03
	6	-114.21	0.10	-1.42
28	6	136.77	0.03	1.27
	8	-136.77	-0.03	-1.14
29	8	152.90	-0.40	1.04
	10	-152.90	0.40	-2.63
30	10	92.66	1.06	4.39
	14	-92.66	-1.06	1.80

Figure D.54 Stiffness Analysis, Test KN-5, Continued

48	1	22.13	-0.03	-0.07
	4	-22.13	0.03	0.00
49	4	-18.97	0.05	0.08
	5	18.97	-0.05	0.05
50	5	17.70	0.05	0.09
	6	-17.70	-0.05	0.04
51	6	-15.03	0.05	0.10
	7	15.03	-0.05	0.04
52	7	14.00	0.02	0.05
	8	-14.00	-0.02	0.03
53	8	-11.57	0.04	0.08
	9	11.57	-0.04	0.05
54	9	10.24	0.01	0.04
	10	-10.24	-0.01	-0.01
55	10	127.08	0.87	3.07
	12	-127.08	-0.87	0.89
56	10	58.12	0.35	0.96
	13	-58.12	-0.35	0.35
57	13	-86.84	0.00	0.29
	14	86.84	0.00	-0.29
58	14	57.24	-0.65	-1.51
	15	-57.24	0.65	-1.27

Figure D.54 Stiffness Analysis, Test KN-5, Continued

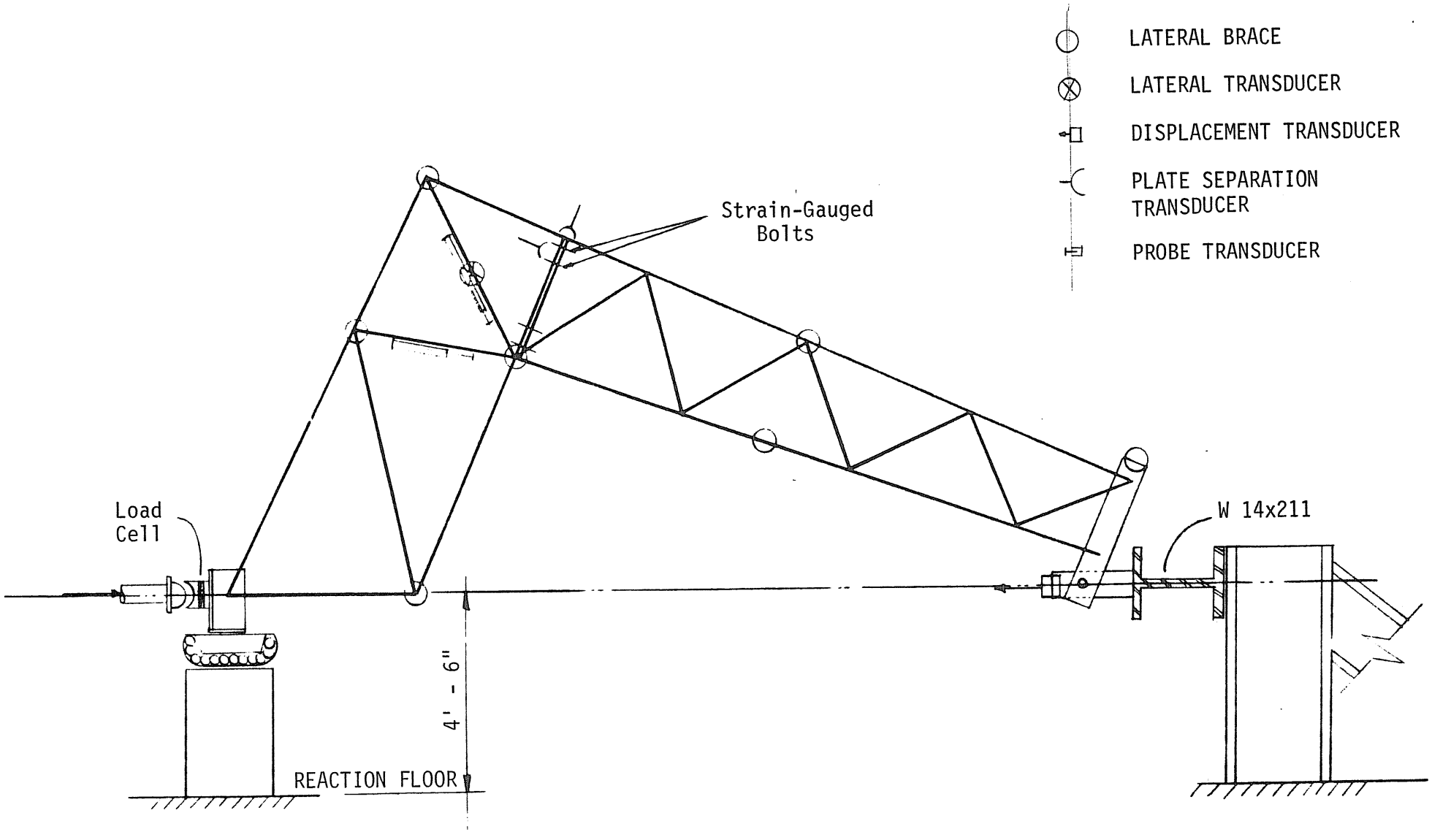

Figure D.55 Test Setup, Test KN-5

KN5- COLUMN

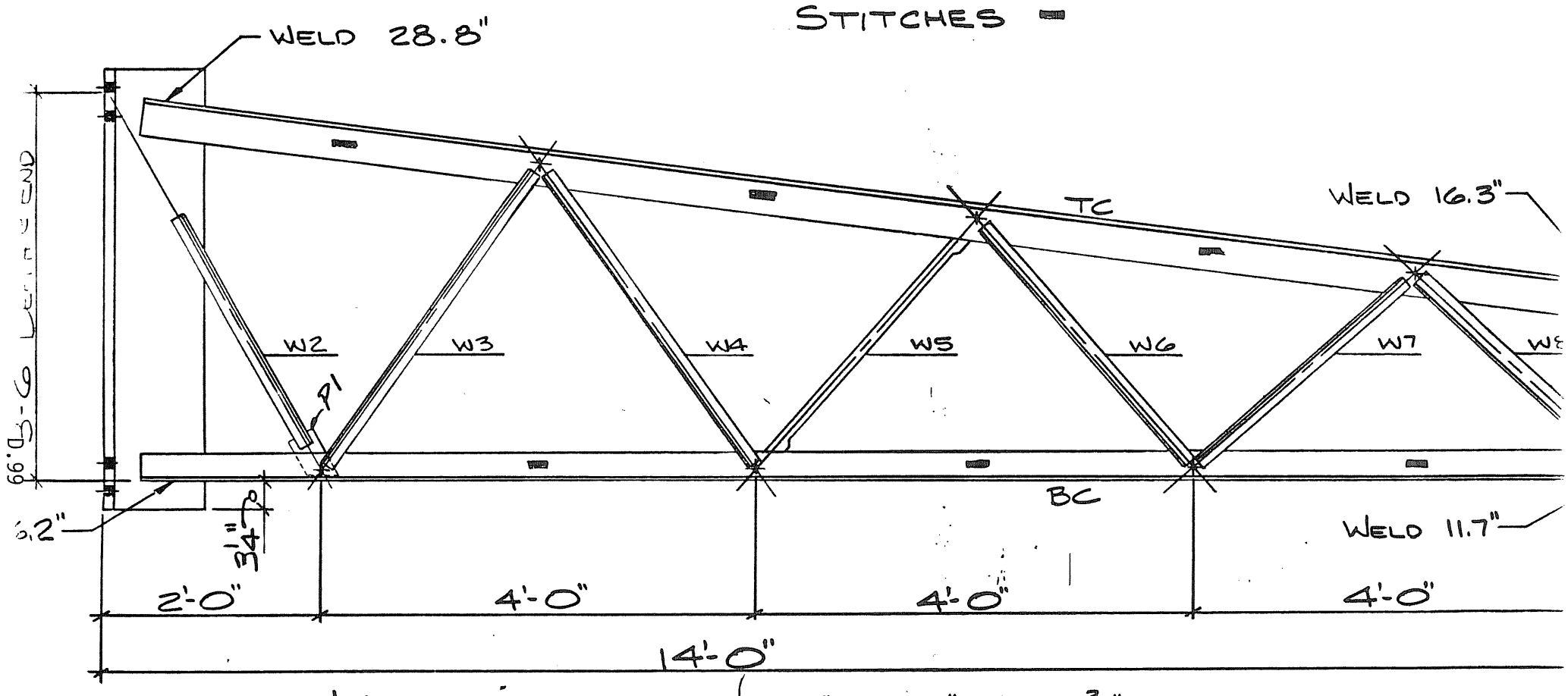

C- SEC. 59- 13'-8½"
C- SEC. 46- 13'-8"
2- SEC. 16- 2'-4½" WELD 6.0"
3- SEC. 16- 3'-3½" WELD 5.4"
4- SEC. 16- 3'-3½" WELD 11.4"
5- SEC. 27- 3'-0" WELD 5.5"
6- SEC. 18- 2'-11" WELD 8.4"
7- SEC. 16- 2'-6" WELD 9.3"
SEC. 22- 2'-6" WELD 11.9"

1- P1- 3x1" PL x 6" WITH 1¾" SKEW
1- P2- 12x1" PL x 3'-3" WITH 1 9/16" Ø HOLE (DRILLED IN

Figure D.56 Shop Details, Test KN-5

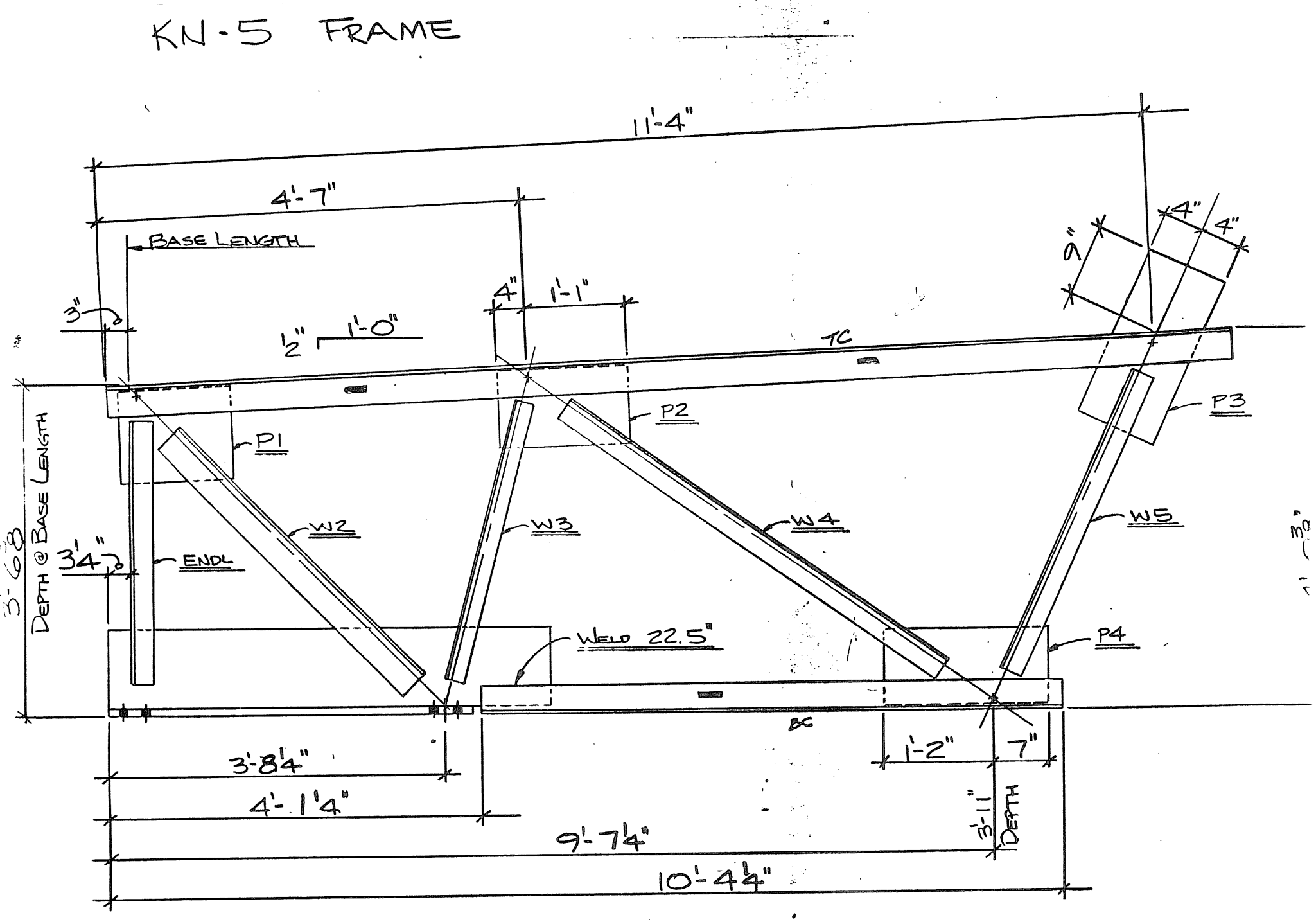

Figure D.56 Shop Details, Test KN-5, Continued

HOLE SIZE 1 1/16" Ø
4" GAGE

BOLT SIZE 1" Ø x 3 1/4" A325

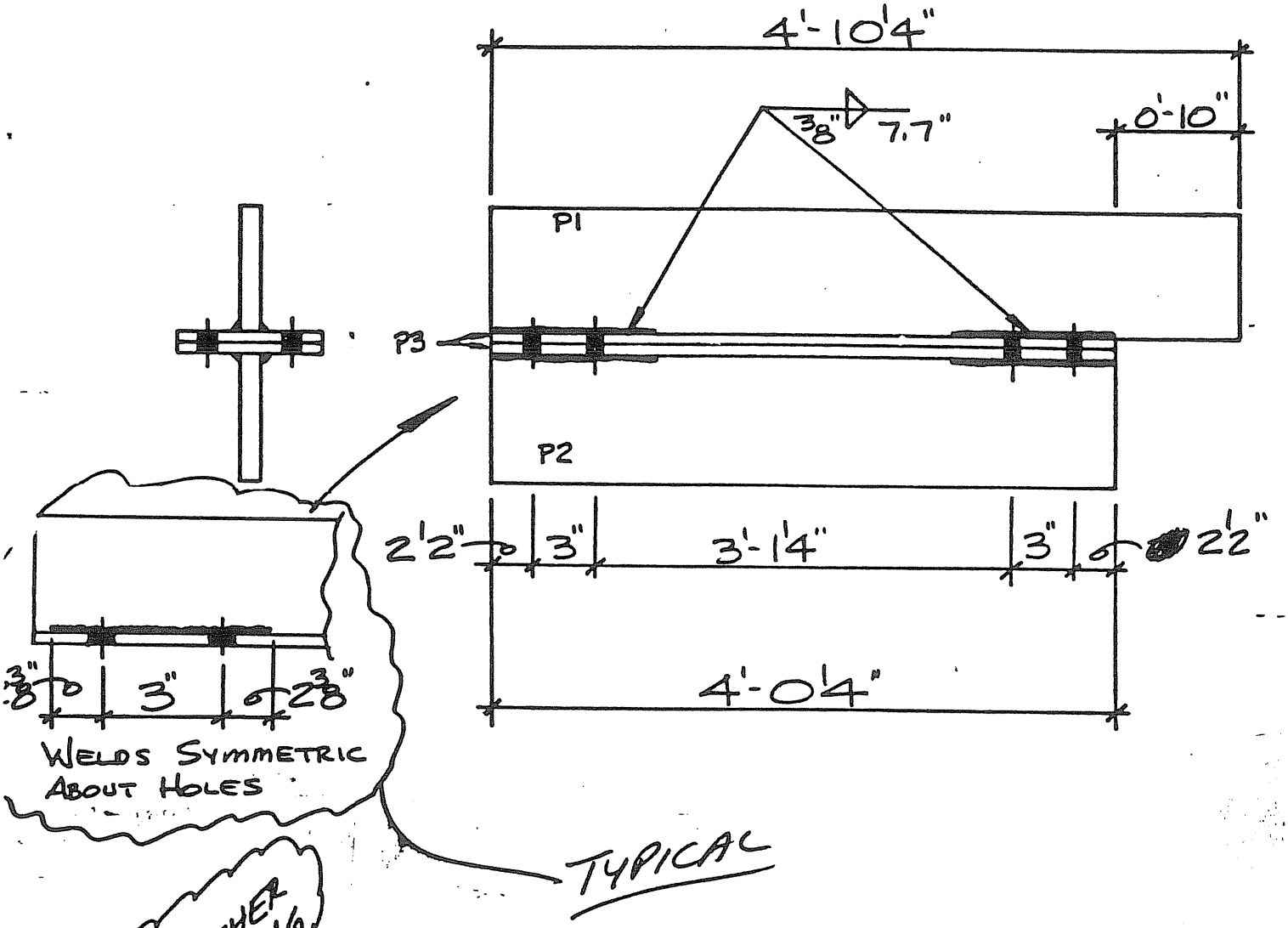

BOLT TOGETHER BEFORE WELDING

1 - P1 - 10x1" PL - 4'-10 1/4" LONG
1 - P2 - 10x1" PL - 4'-0 1/4" LONG
2 - P3 - 8x1" PL - 4'-0 1/4" LONG

Figure D.56 Shop Details, Test KN-5, Continued

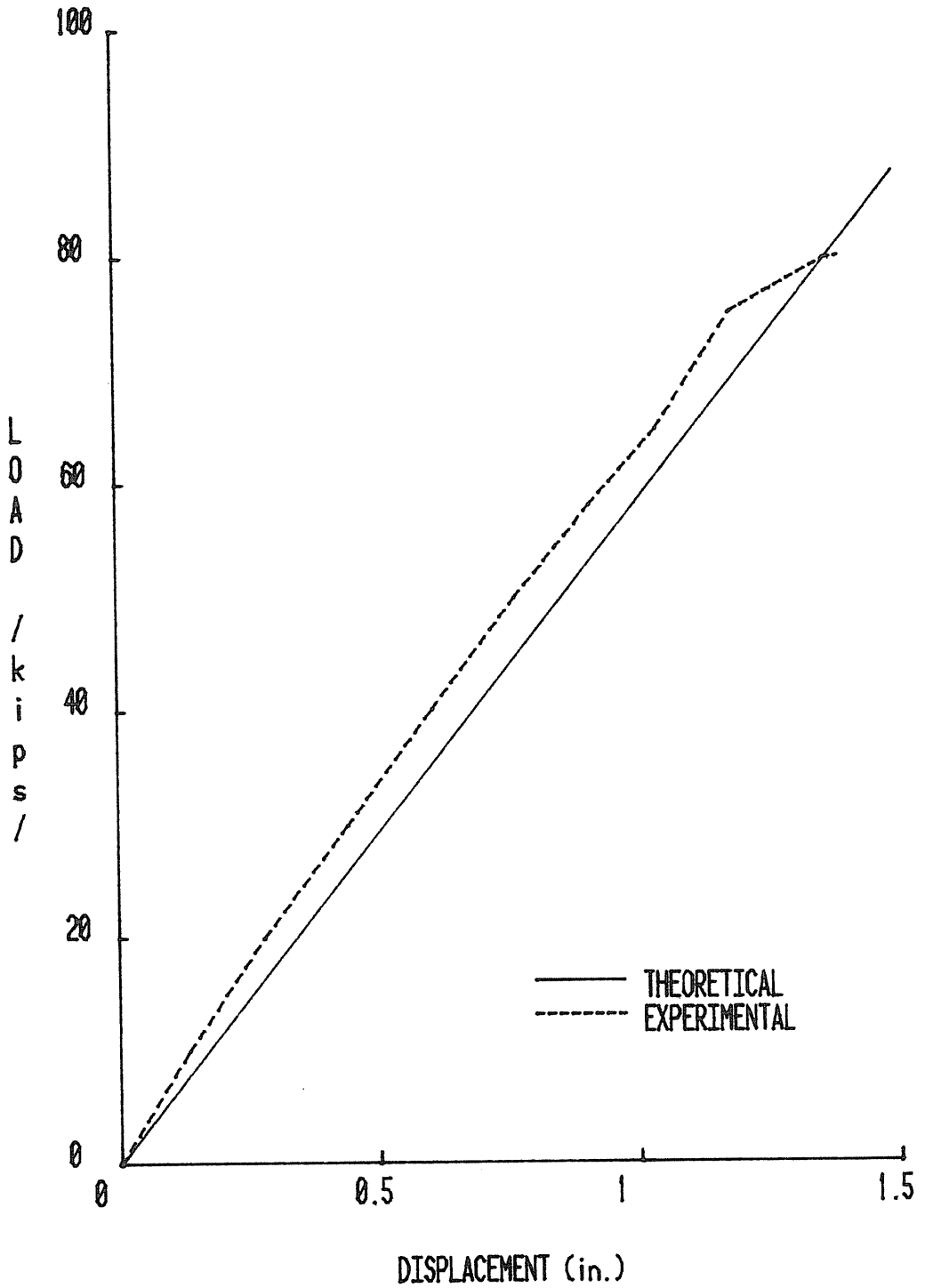

Figure D.57 Load vs. Displ. in Load Direction, KN-5

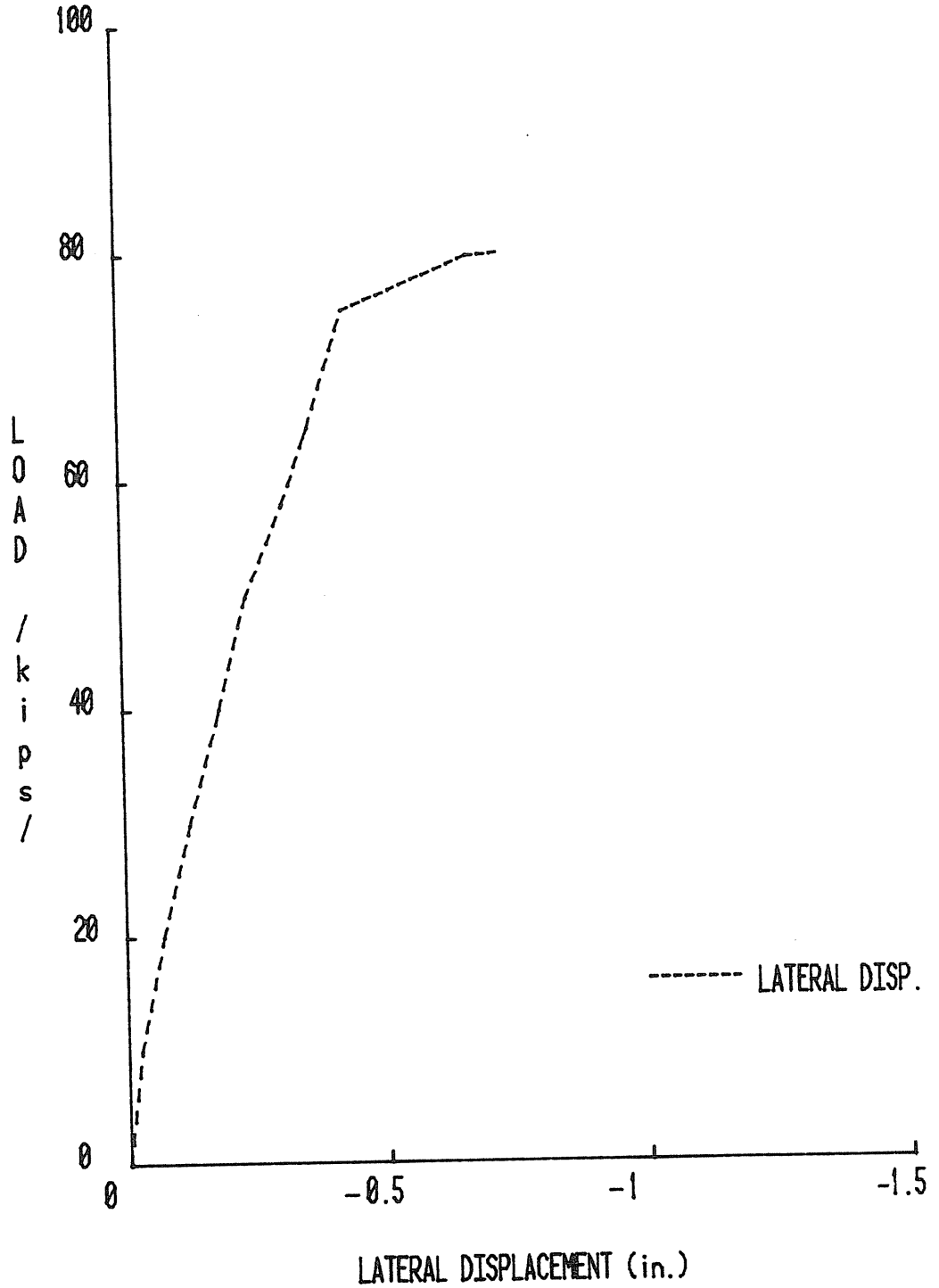

Figure D.58 Load vs. Lateral Displacement, KN-5

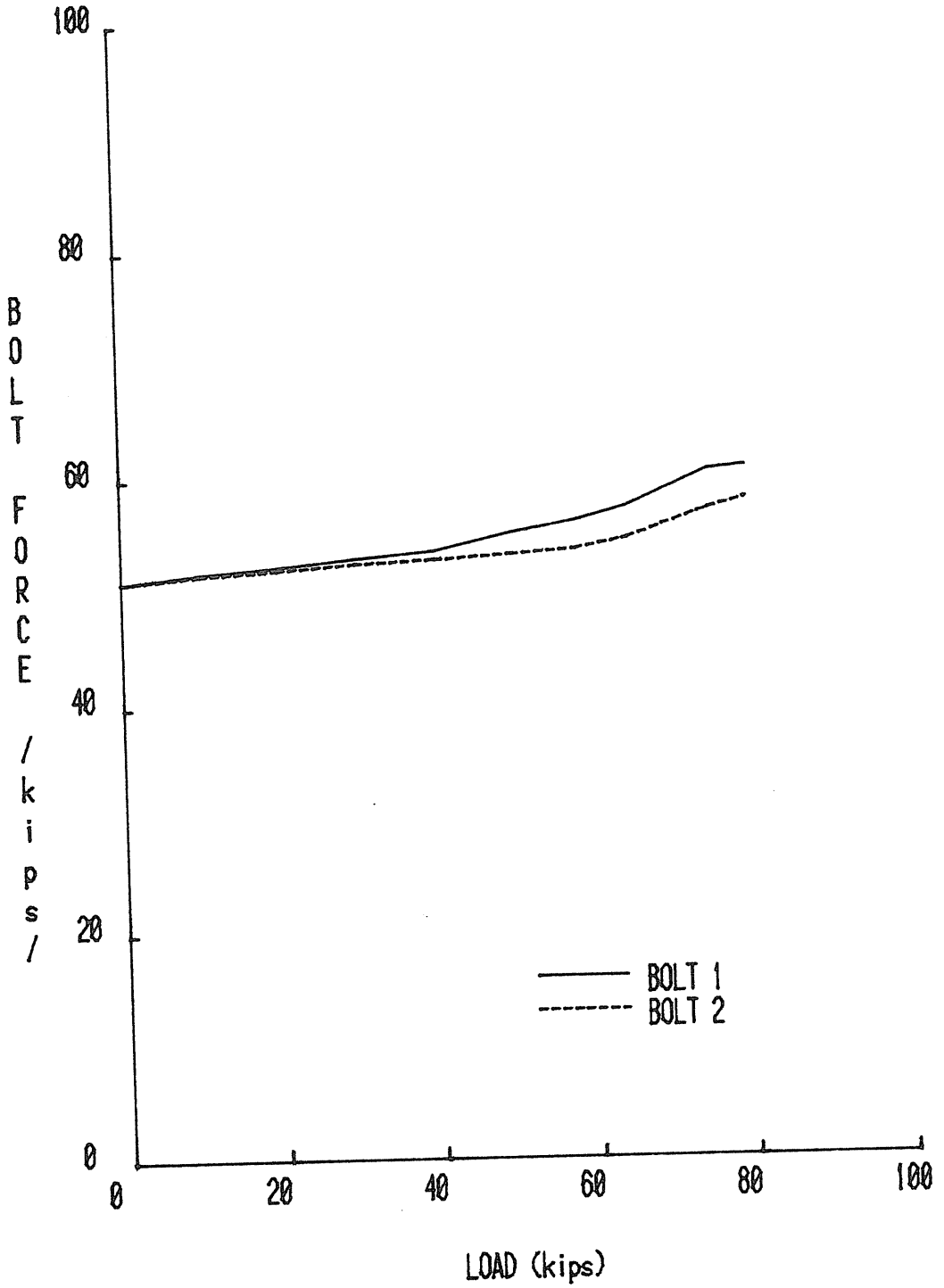

Figure D.59 Bolt Force vs. Load, KN-5

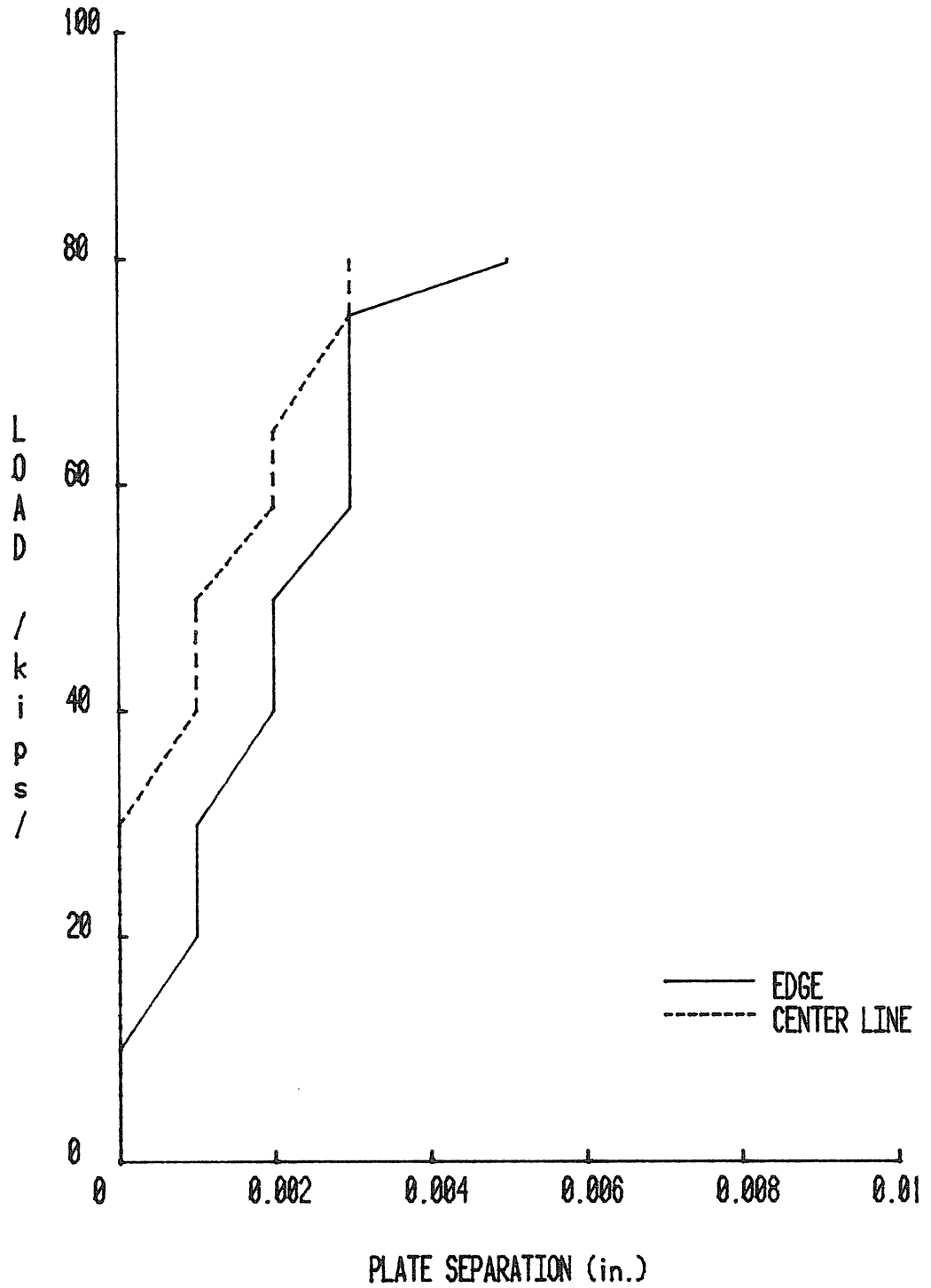

Figure D.60 Load vs. Plate Separation, KN-5

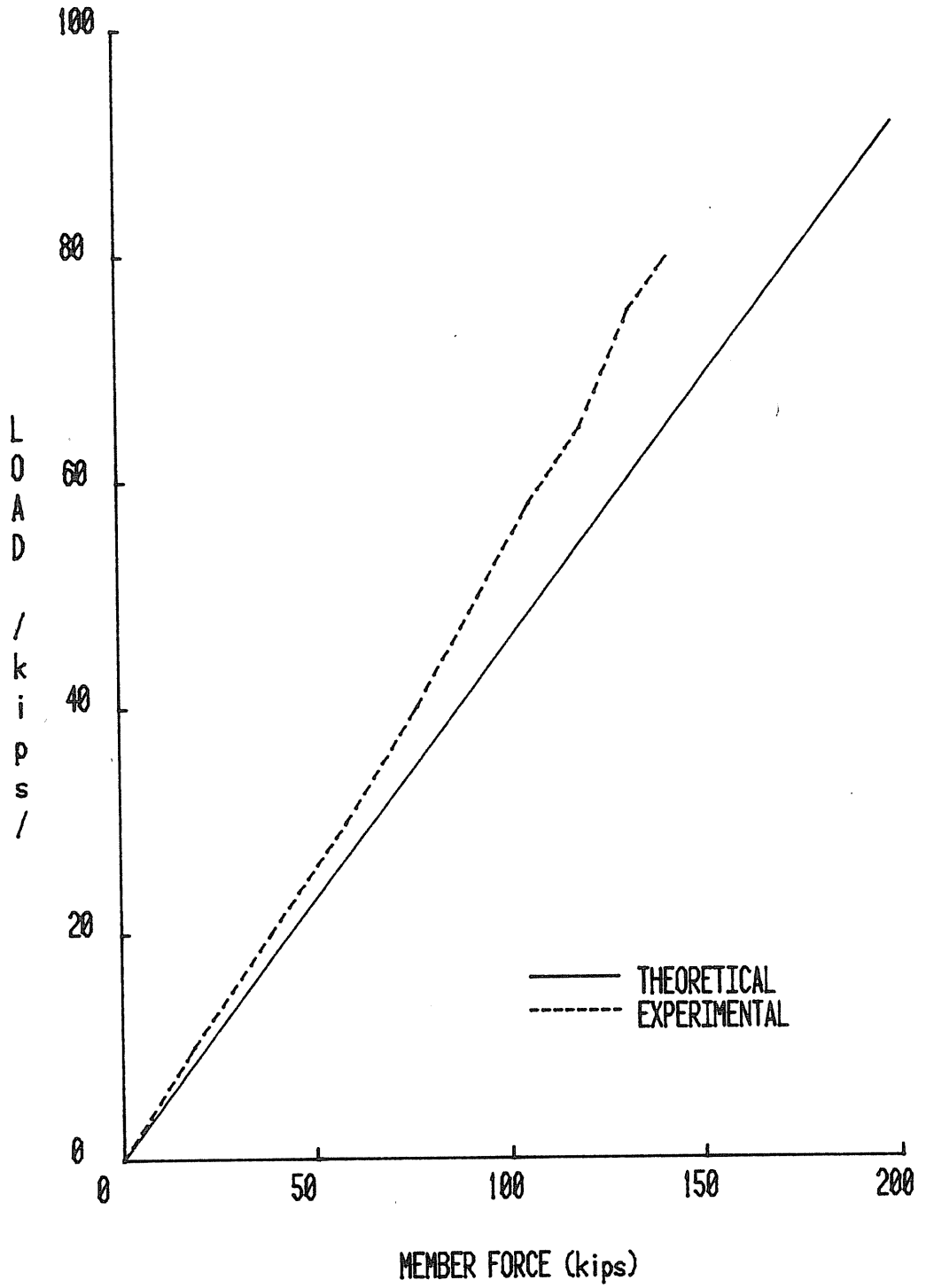

Figure D.61 Load vs. Member (#55) Force, KN-5

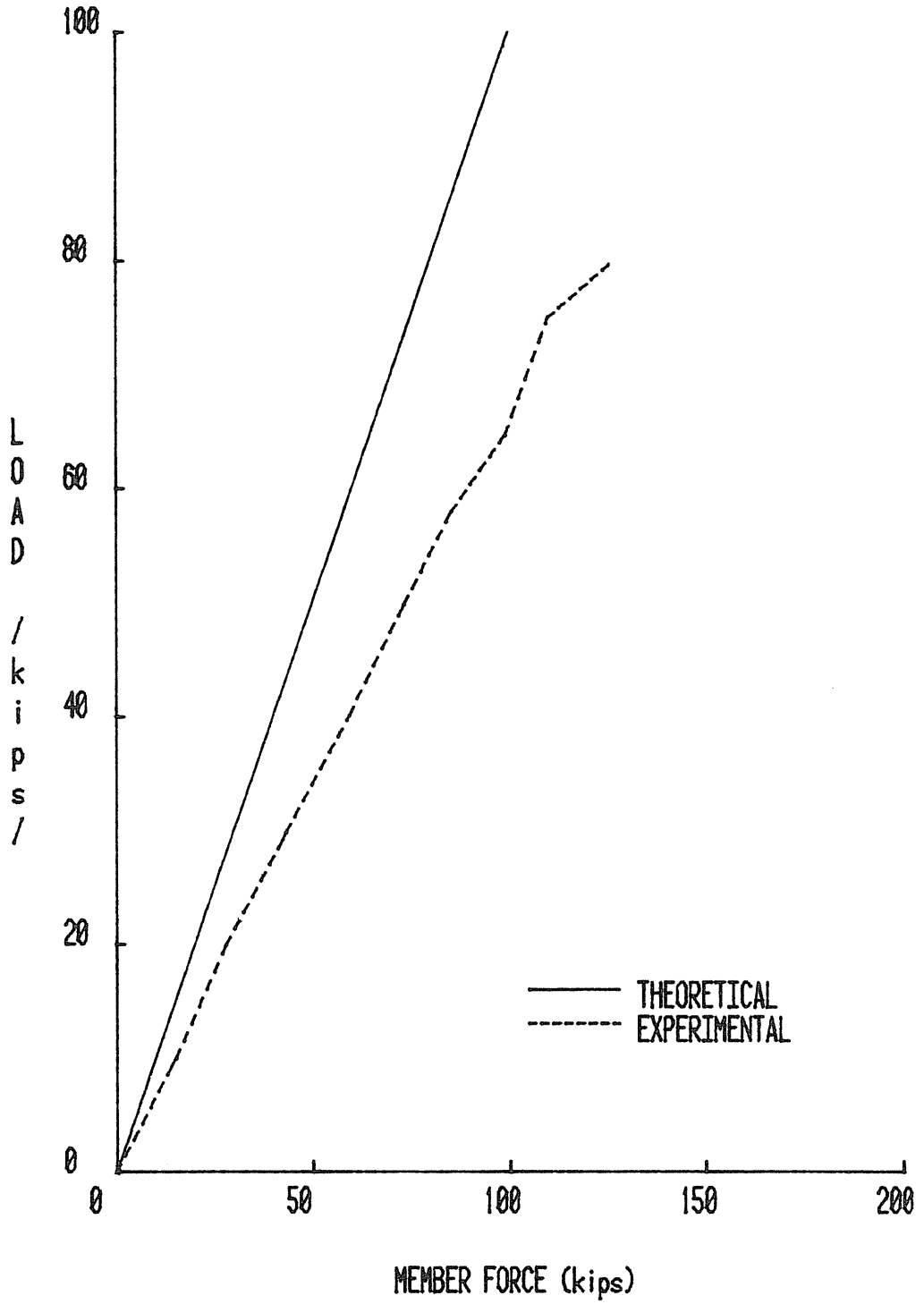

Figure D.62 Load vs. Member (#56) Force, KN-5

VULCRAFT KNEE CONNECTION TEST SUMMARY

Project: VULCRAFT

Test No.: KN-7 (Modified KN-3)

Test Date: 6/13/84

Purpose: Study of Behavior of Knee Area

Knee Area Dimensions: 28.5 in. x 30.6 in.

Knee Diagonal: 41.8 in.

Splice Plate Dimensions: —

Bolt Diameter: 3/4 in. No. of Bolts in Tension: 4

Pretension Force per Bolt: 28 kips

Failure Load: 71.8 kips

Failure Mode: Buckling of vertical member at knee area

Predicted Failure Loads:

Method: Vulcraft Analysis Load: 38.86x1.66 = 64.5 kips

Method: Load:

Method: Load:

Method: Load:

Maximum Displ. in Load Direction: 1.127 in. @ 69.5 kips

Maximum Plate Separation: 0.008 in. @ 71.8 kips

Discussion:

Observations:

-Failure occurred at 71.8 kips by buckling of vertical member at knee area (member #12).

-At 10 kips, minor yielding was detected at connection area.

-At 35 kips, more yielding was detected at compression region of rafter stem plate.

-At 50 kips, yielding occurred at bottom chord of rafter next to the end plate stem.

-At 60 kips more yielding was observed at rafter stem.

-At 70 kips, yielding was detected at end joints of members 12, 13 and 14 of the rafter.

-At 71 kips, yielding shown on bottom chord of rafter.

Loading:

-Maximum applied load was 71.8 kips.

VULCRAFT (KN-7)

-Maximum bolt force was 36.1 kips on bolt #2 (East side bolt).

-Maximum axial strain in diagonal member (#11) was 0.00148 in./in. and in vertical member of knee area (#12) was 0.00267 in./in. at ram load of 71.8 kips.

-Maximum lateral displacement of inner corner of knee was 0.341 in. to the east.

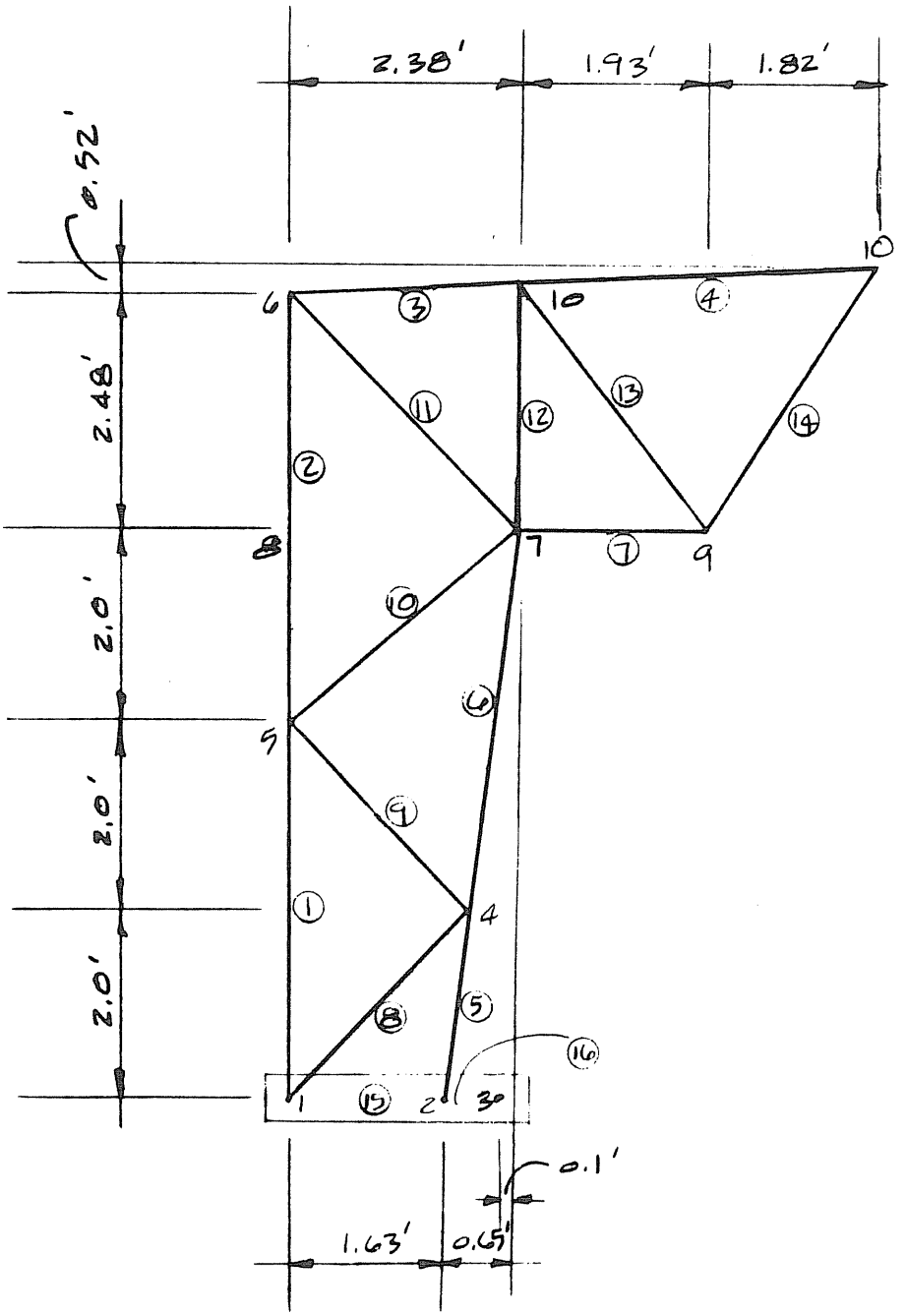

Figure D.63 Specimen Geometry, Test KN-7

Test KN-7
==========

Given:
---

tf=0.750 in.	(Thickness of flange in tee hanger)
a =1.500 in.	(Distance from bolt center to edge)
b =1.500 in.	(Distance from bolt center to web)
p =3.000 in.	(Width of tee hanger per bolt line)
Fy=50.00 ksi	(Yield stress of tee hanger plate)
Bolt type=A325	(Type of bolt. A325 or A490)
db=0.750 in.	(Diameter of Bolt)
B =38.88 kips.	(Ultimate capacity of bolt)
Fyb=88.00 kips.	(Yield stress of threaded bolt)
Ptb=27.21 kips.	(Pretension force in bolt=0.70 x B)

Solution:

According to the method outlined in Chapter 4 of the AISC Manual, the results are:

Service load capacity = 64.84 kips.
======

Service load capacity times 2.0=129.69 kips.
======

Predicted failure mode is plate yielding

Predicted bolt force at factored load= 40.63 kips
======

According to the method outlined in THE SPLIT-TEE ANALOGY IN BOLTED SPLICES AND BEAM-COLUMN CONNECTIONS, by Kennedy et al published in Joints in Structural Steelwork, John Wiley & Sons, NY ,1981, pp.2.138-2.157, the results are:

Elastic load capacity = 54.98 kips
======

Ultimate load capacity = 97.10 kips
======

Predicted failure mode is plate yielding

Predicted bolt force at factored load= 33.08 kips
======

Figure D.64 AISC and Kennedy Analyses, Test KN-7

```
*****************************************************************
                    STIFFNESS ANALYSIS
                         ØF
                    PLANE FRAMES
*****************************************************************

 JOB NAME: VULCRAFT KN-7 FRAME, WORKING LOAD=38.86 KIPS (MODIFIED KN-3)


**** JOINT COORDINATES ****

JOINT    X-COORD    Y-COORD
         ( FT. )    ( FT. )

   1      0.000      0.000
   2      1.630      0.000
   3      2.421      0.000
   4      1.880      2.000
   5      0.000      4.000
   6      2.379      6.000
   7      0.000      6.000
   8      0.000      8.553
   9      2.379      8.751
  10      4.284      6.000
  11      6.101      9.065
  12      6.873      8.752


**** SUPPORT CONDITIONS ****

 SUPPORT  X-DIR.   Y-DIR.   Z-DIR.
    12       1        1        Ø
     3       1        1        Ø


**** MEMBER INCIDENCES ****

 MEMBER   I JOINT   J JOINT
    1        1        5
    2        5        7
    3        8        9
    4        9       11
    5        2        4
    6        4        6
    7        6       12
    8        [illegible]      [illegible]
    9        [illegible]      [illegible]
   10        5        6
   11        6        8
   12        6        9
   13        9       12
   14       10       11
   15        1        2
   16        2        3
   17        6        7
   18        7        8
   19       11       12
```

Figure D.65 Stiffness Analysis, Test KN-7,

**** MEMBER PROPERTIES ****

MEMBER	AREA (IN^2)	INERTIA (IN^4)	ELASTICITY (K/IN^2)
1	1.75	0.65	29000.0
2	1.75	0.65	29000.0
3	3.21	2.76	29000.0
4	3.21	2.76	29000.0
5	3.21	2.76	29000.0
6	3.21	2.76	29000.0
7	2.19	1.31	29000.0
8	0.75	0.16	29000.0
9	0.75	0.16	29000.0
10	0.75	0.16	29000.0
11	2.19	1.31	29000.0
12	1.61	0.61	29000.0
13	1.52	0.50	29000.0
14	1.27	1.43	29000.0
15	18.00	144.00	29000.0
16	18.00	144.00	29000.0
17	19.00	84.00	29000.0
18	1.75	0.60	29000.0
19	170.00	0.00	29000.0

**** JOINT **** [illegible]

** JOINT LOADS **

JOINT	FORCE X (K)	FORCE Y (K)	MOMENT Z (FT-K)
1	0.00	0.00	0.00
2	0.00	0.00	0.00
3	0.00	0.00	0.00
4	0.00	0.00	0.00
5	0.00	0.00	0.00
6	0.00	0.00	0.00
7	0.00	0.00	0.00
8	0.00	0.00	0.00
9	0.00	0.00	0.00
10	0.00	0.00	0.00
11	-14.50	-35.00	0.00
12	0.00	0.00	0.00

Figure D.65 Stiffness Analysis, Test KN-7, Continued

```
************************
* RESULTS OF ANALYSIS *
************************
```

JOB NAME: VULCRAFT KN-7 FRAME, WORKING LOAD=38.86 KIPS (MODIFIED KN-
LOADING 1 DL+LL

***** JOINT DISPLACEMENTS *****

JOINT	X-DIR. (IN)	Y-DIR. (IN)	Z-DIR. (RAD)
1	-0.0008	-0.1159	0.0235
2	-0.0004	-0.0489	0.0243
3	0.0000	0.0000	0.0247
4	-0.1016	-0.0444	0.0238
5	-0.1713	-0.0016	0.0235
6	-0.2095	-0.0666	0.0271
7	-0.2290	-0.2747	0.0373
8	-0.1918	-0.0562	-0.0074
9	-0.1380	-0.0525	-0.0257
10	-0.0888	-0.1687	-0.0068
11	-0.1187	-0.0610	-0.0241
12	0.0001	0.0001	0.0001

***** REACTIONS *****

JOINT	FORCE X (K)	FORCE Y (K)	MOMENT Z (FT-K)
12	0.015	2.086	0.000
2	14.671	35.874	0.000

Figure D.65 Stiffness Analysis, Test KN-7 , Continued

[illegible] END [illegible]

MEMBER	JOINT	AXIAL (K)	SHEAR (K)	MOMENT (FT-K)
1	1	-25.67	-0.05	-0.08
	5	25.67	0.05	-0.14
2	5	-37.07	-0.07	0.08
	7	37.07	0.07	-0.22
3	8	-30.78	-0.69	-0.51
	9	30.78	0.69	-1.14
4	9	-7.34	0.51	1.16
	11	7.34	-0.51	0.75
5	2	53.98	-0.23	-0.09
	4	-53.98	0.23	-0.37
6	4	68.58	-0.09	0.31
	6	-68.58	0.09	-0.69
7	6	45.36	2.39	3.14
	10	-45.36	-2.39	1.41
8	1	11.13	-0.01	-0.01
	4	-11.13	0.01	0.00
9	4	-8.74	0.03	0.06
	5	8.74	-0.03	0.03
10	5	7.78	0.01	0.03
	6	-7.78	-0.01	-0.02
11	6	44.22	0.15	0.39
	8	-44.22	-0.15	[illegible]
12	8	38.95	0.18	0.35
	9	-38.95	-0.18	0.10
13	9	-41.01	-0.14	-0.12
	10	41.01	0.14	-0.38
14	10	42.22	-0.50	-[illegible].05
	11	-42.22	0.50	-0.72
15	1	-7.68	17.57	0.09
	2	7.68	-17.57	38.54
16	2	-14.60	-35.97	-20.46
	3	14.60	35.97	0.00
17	6	0.40	-1.46	-3.18
	7	-0.40	1.46	-2.30
18	7	-35.61	0.33	0.51
	8	35.61	-0.33	0.34
19	11	-0.01	-0.03	-0.03
	12	0.01	0.03	0.00

Figure D.65 Stiffness Analysis, Test KN-7, Continued

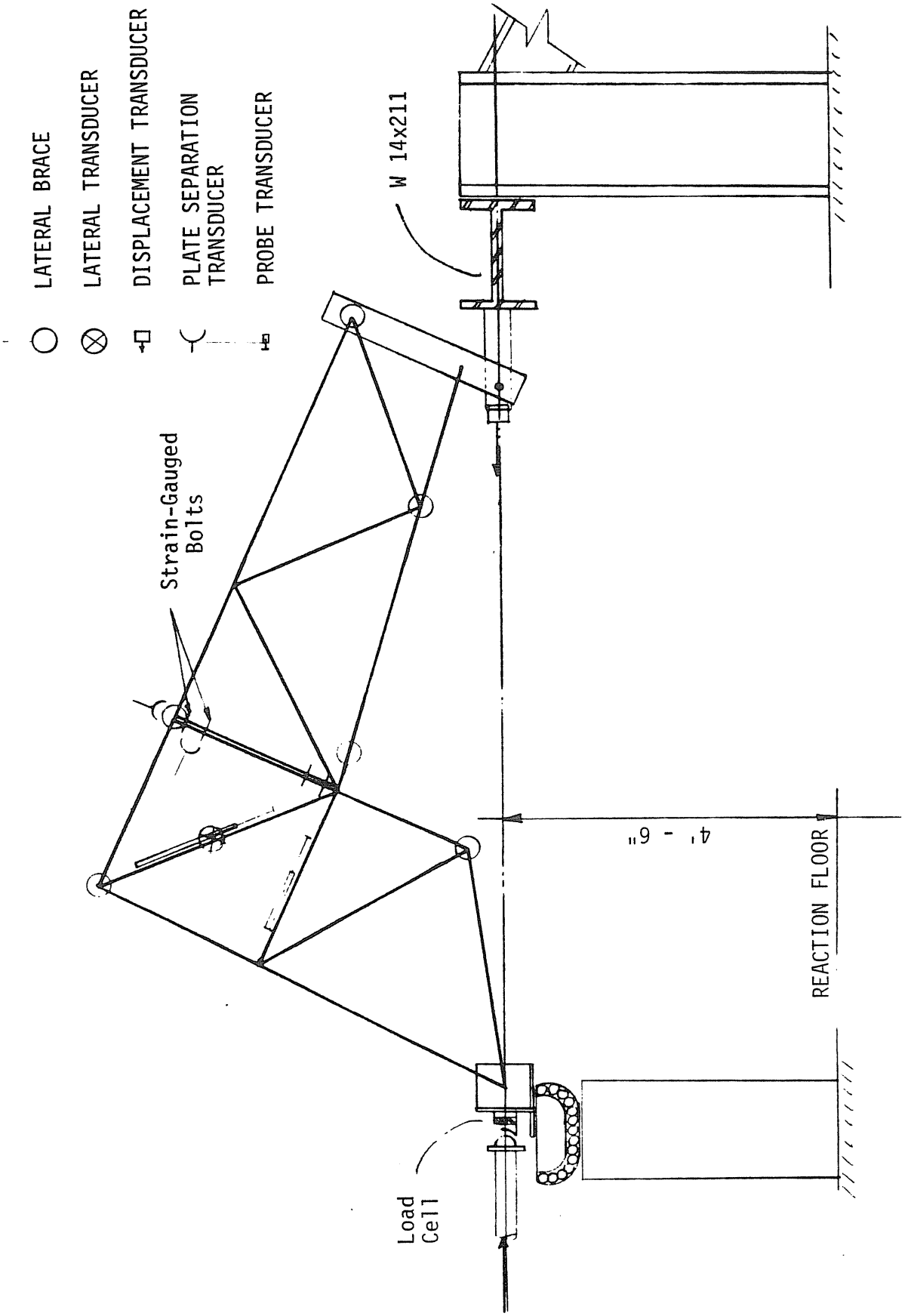

Figure D.66 Test Setup, Test KN-7

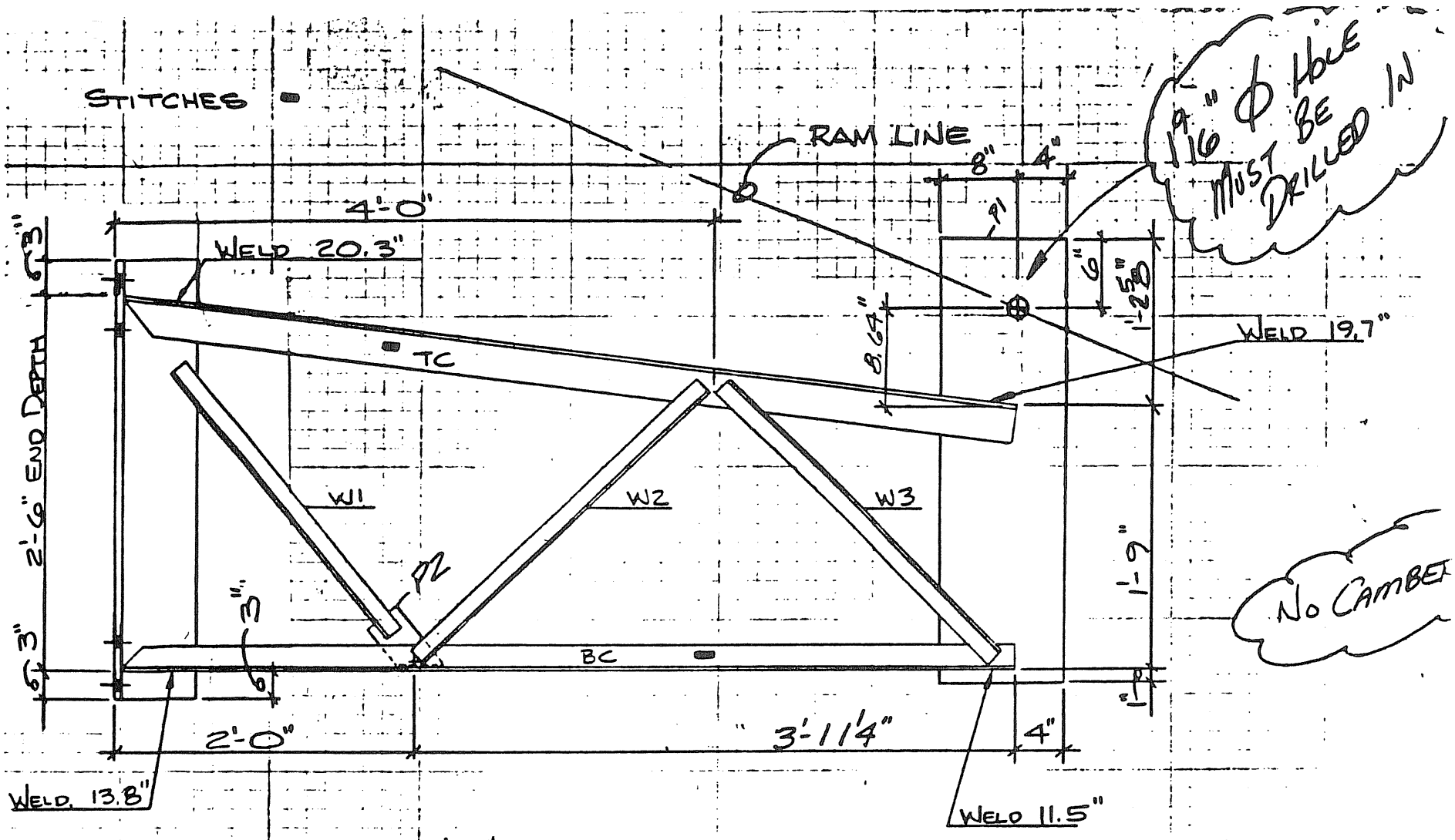

2- TC - SEC. 46 - 5'-11⅛" TC BUTTED TO PL & WELD OUTSTANDING LEG ALL AROUND
2- BC - SEC. 31 - 5'-10¾"

2- W1 - SEC. 16 - 2'-3½" WELD 6.0"
2- W2 - SEC. 16 - 2'-7½" WELD 4.9"
2- W3 - SEC. 16 - 2'-7" WELD 7.9"

1- P1 - 10×1" PL × 2'-11⅛" WELD 6.0"
1- P2 - 3×1 PL × 6" WITH 2½" SKEW

(QUANTITIES)
HOLD ALL WELDS

Figure D.67 Shop Details, Test KN-7

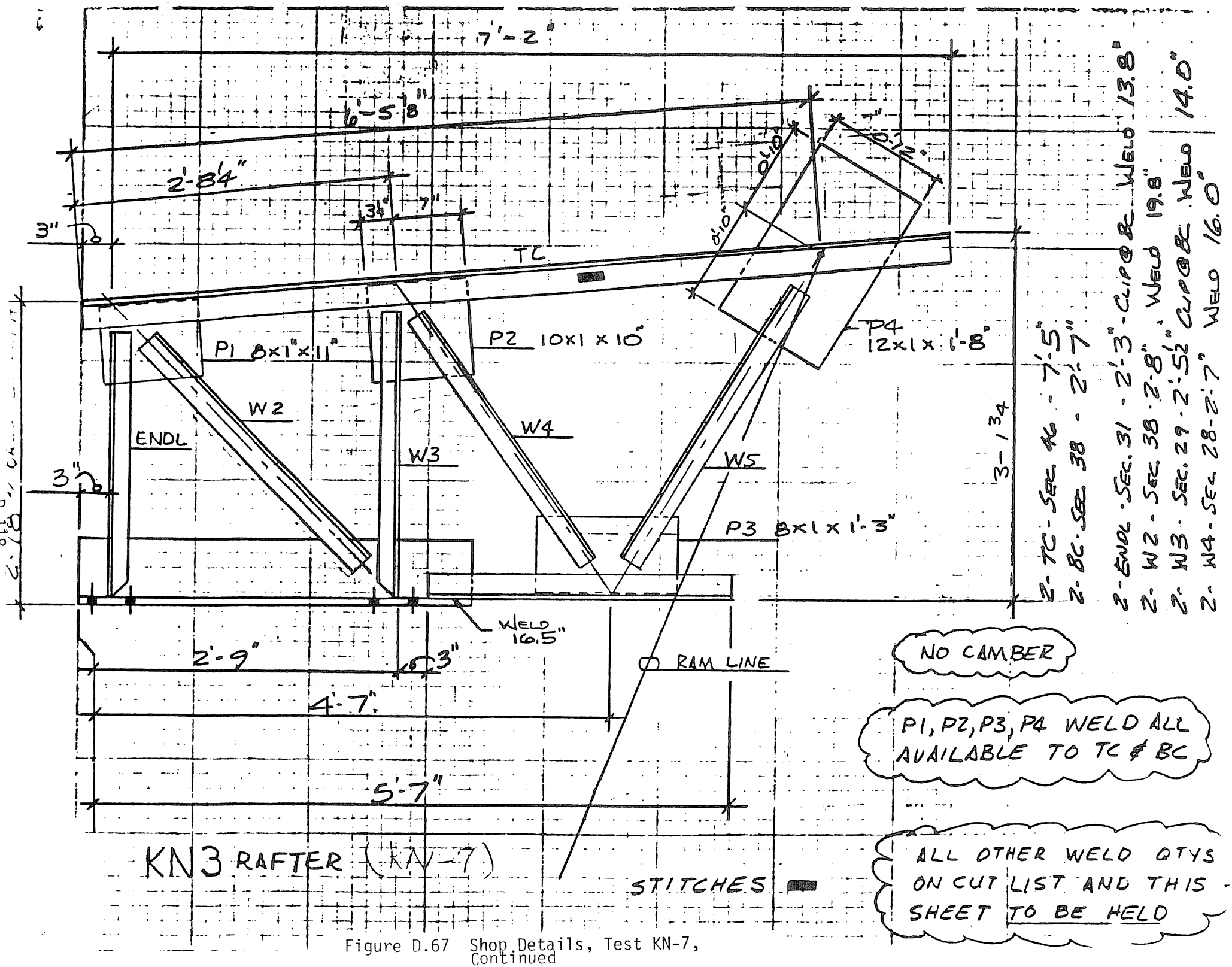

Figure D.67 Shop Details, Test KN-7, Continued

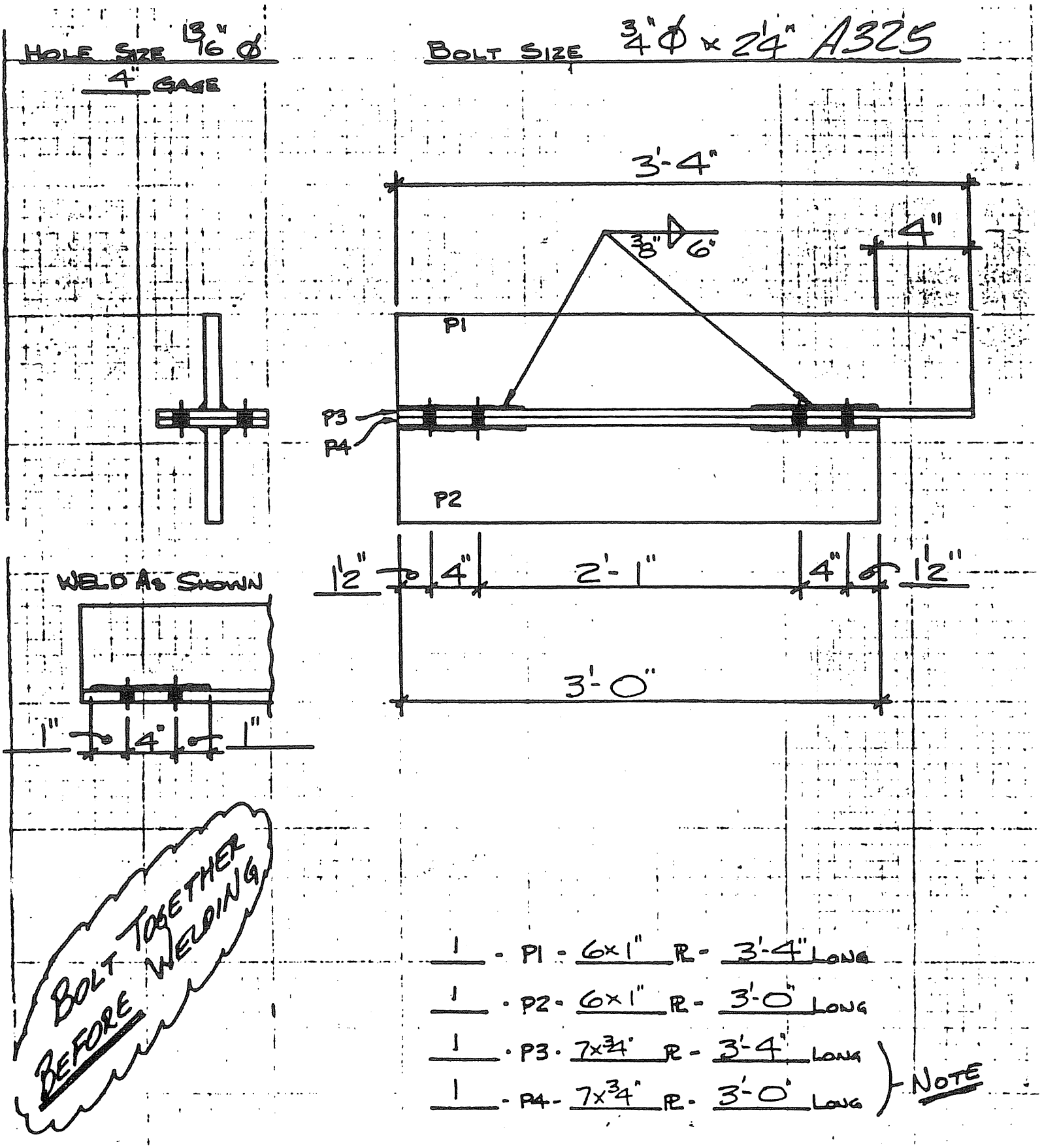

Figure D.67 Shop Details, Test KN-7, Continued

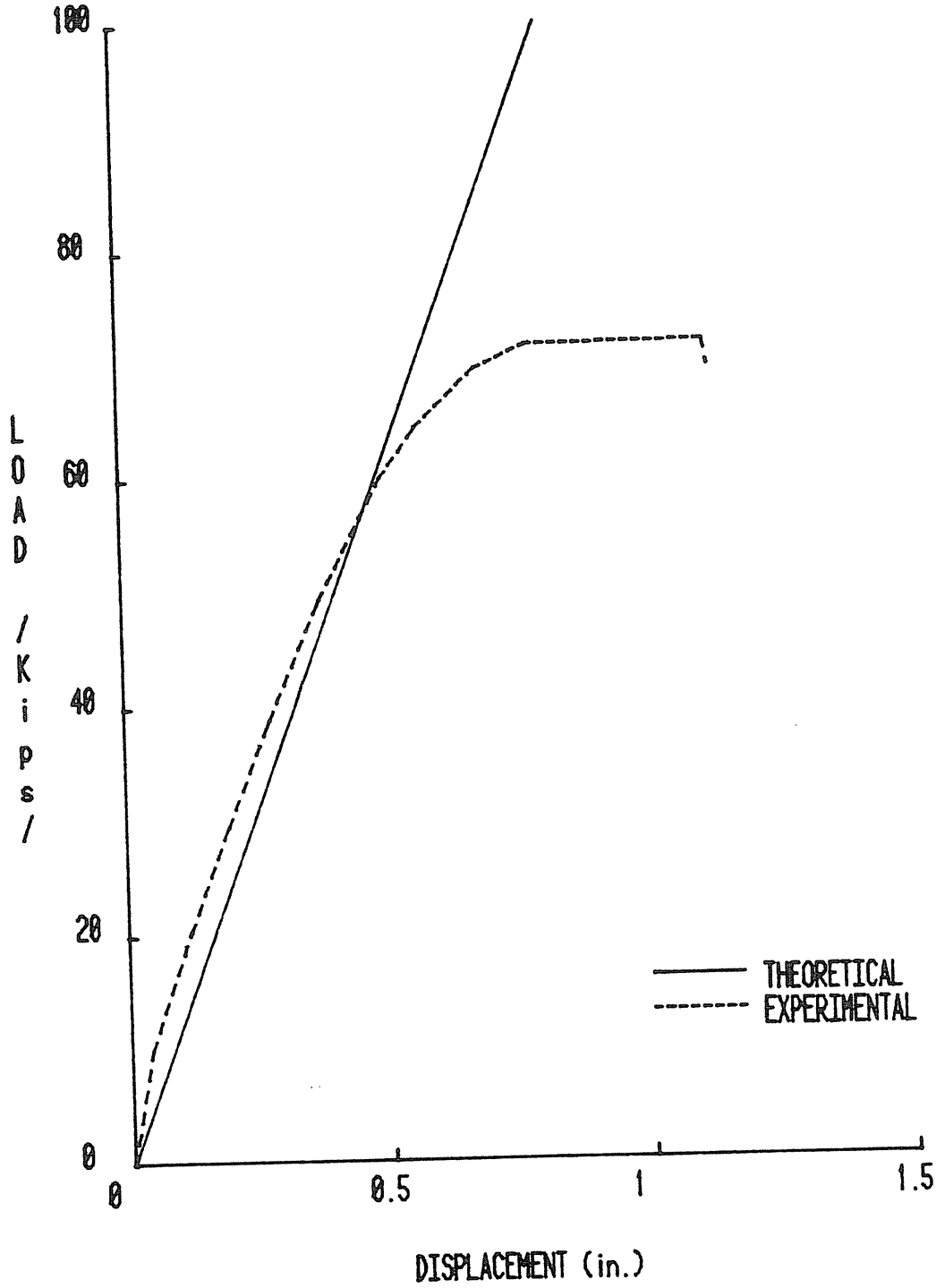

Figure D.68 Load vs. Displ. in Load Direction, KN-7

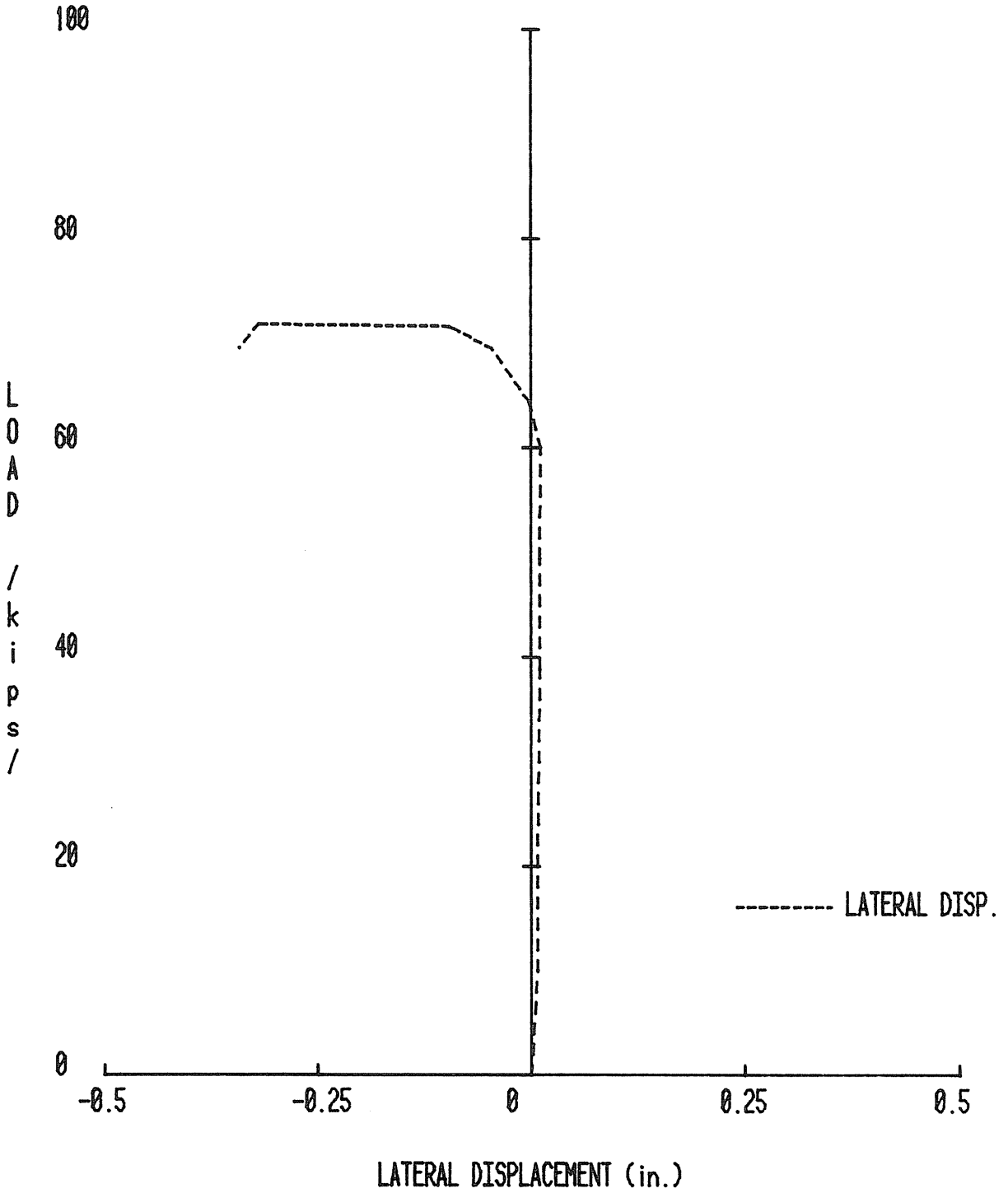

Figure D.69 Load vs. Lateral Displacement, KN-7

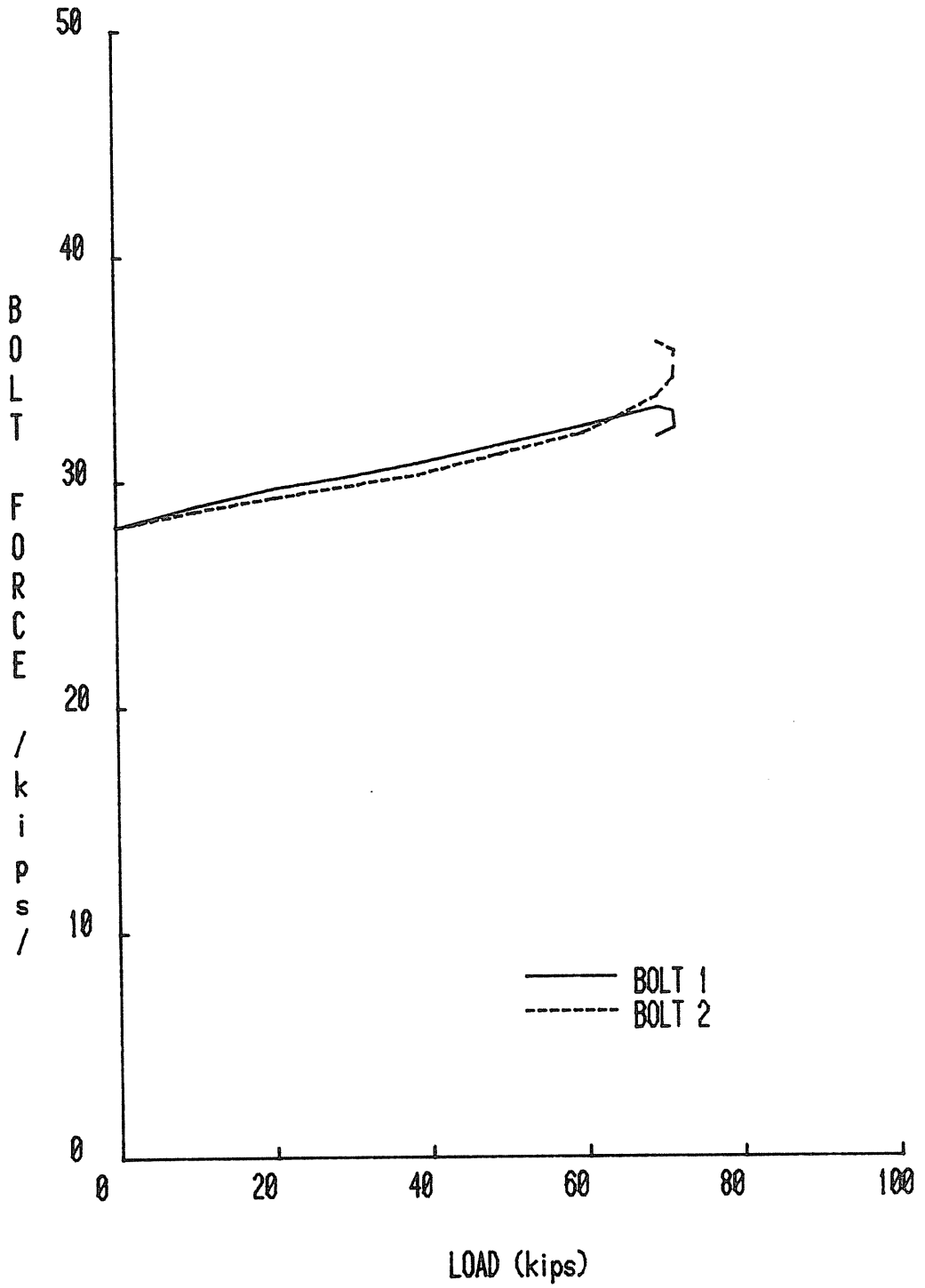

Figure D.70 Bolt Force vs. Load, KN-7

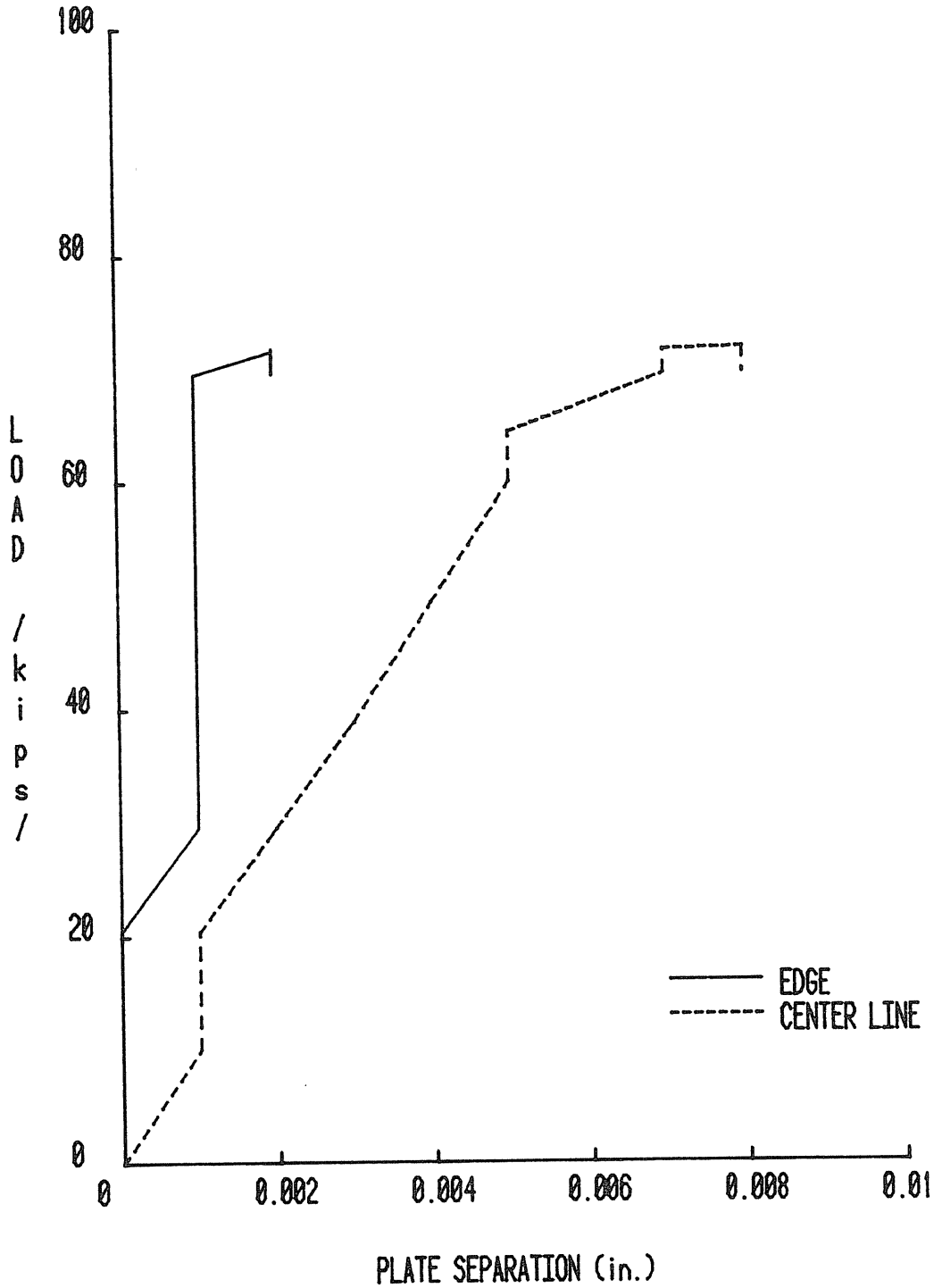

Figure D.71 Load vs. Plate Separation, KN-7

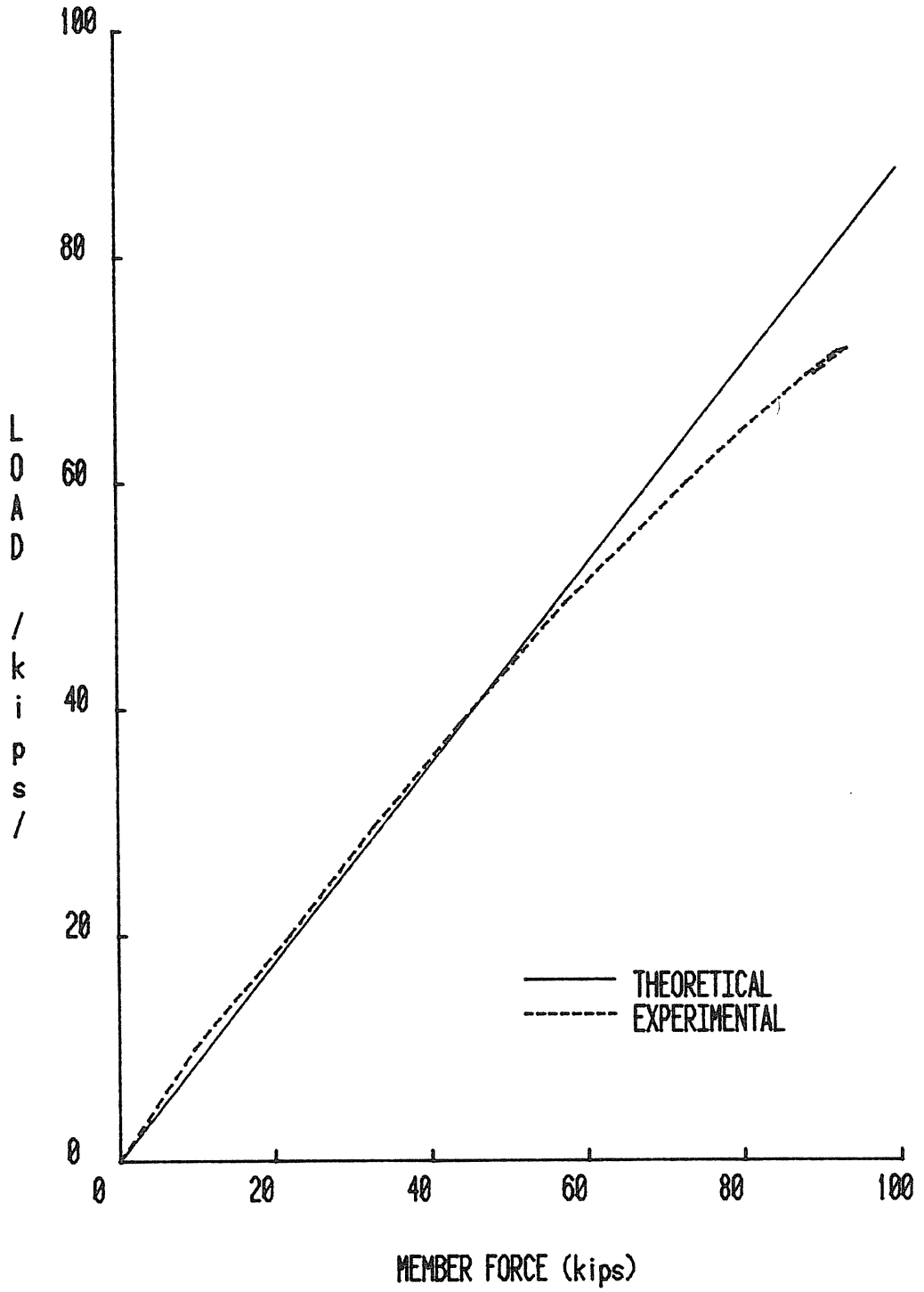

Figure D.72 Load vs. Member (#11) Force, KN-7

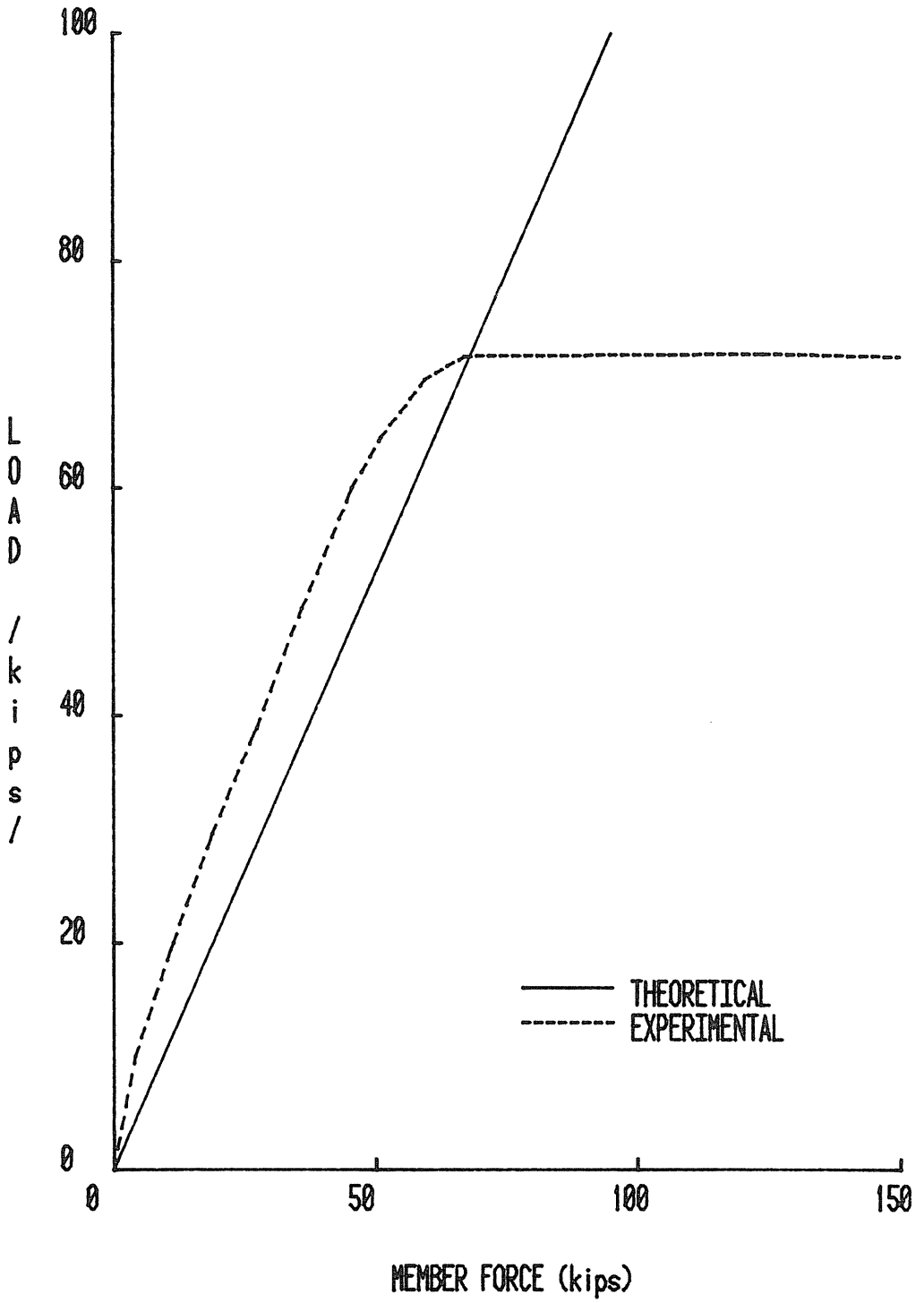

Figure D.73 Load vs. Member (#12) Force, KN-7

APPENDIX E

COLUMN BASE TEST DATA

(CB TESTS)

VULCRAFT COLUMN BASE TEST SUMMARY

Project: VULCRAFT

Test No.: CB-1A

Test Date: 6/7/84

Purpose: Study of Behavior of Column Base for Wind Loading

Load Eccentricity: 10.59"

Base Plate Dimensions: 8x12x1 inch

Anchor Bolt Diameter: 1" No. of Anchor Bolts: 2

Pretension Force per Anchor Bolt: 3 kips

Failure Load: 35 kips

Failure Mode: Excessive end rotation and plate separation

Predicted Failure Loads:

Method:	Vulcraft Analysis	Load:	17.66x1.66 = 29.31 kips
Method:		Load:	
Method:		Load:	
Method:		Load:	

Maximum Displ. in Load Direction: 0.351" @ 35 kips

Maximum Plate Separation: 0.25" @ 35 kips

Discussion:

Observations:

-Failure occurred at 35 kips due to excessive end rotation and plate separation.

-At 12.5 kips, no yielding but significant plate separation was observed on tension side of plate.

-At 17.5 kips, minor yielding was observed at compression leg adjacent to the base plate.

-At 35 kips, maximum plate separation measured was 0.25 inch.

-At 35 kips, some yielding was detected on compression angle of column.

Loading:

-Maximum applied load was 35 kips.

-Maximum bolt force was 52.9 kips on bolt #1 (North side bolt).

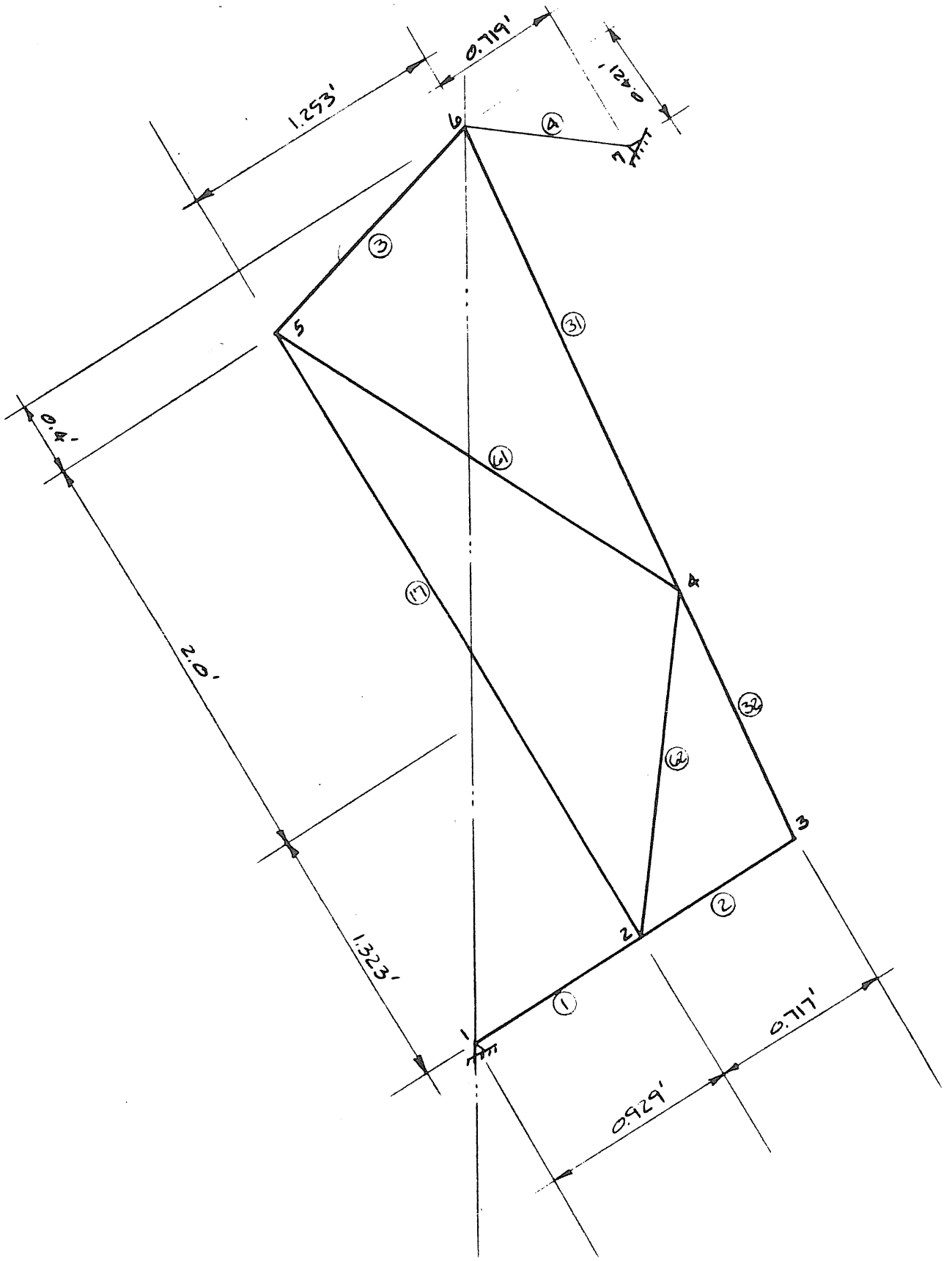

Figure E.1 Specimen Geometry, Test CB-1A

```
*****************************************************************
                    STIFFNESS ANALYSIS
                         0F
                    PLANE FRAMES
*****************************************************************

 JOB NAME: VULCRAFT CB-1 & CB-2 FRAME, (WORKING LOAD=17.66 KIPS)
```

**** JOINT COORDINATES ****

JOINT	X-COORD (FT.)	Y-COORD (FT.)
1	-0.929	0.000
2	0.000	0.000
3	0.717	0.000
4	0.907	1.323
5	0.000	3.323
6	1.253	3.723
7	1.972	3.302
8	0.359	-0.167
9	0.359	0.000
10	0.000	-2.000

**** SUPPORT CONDITIONS ****

SUPPORT	X-DIR.	Y-DIR.	Z-DIR.
1	1	1	0
7	1	1	0
8	1	1	0
10	1	1	0

**** MEMBER INCIDENCES ****

MEMBER	I JOINT	J JOINT
1	1	9
2	2	9
3	5	6
4	6	7
6	9	3
7	9	8
8	2	10
17	2	5
31	4	6
32	3	4
61	4	5
62	2	4

Figure E.2 Stiffness Analysis, Test CB-1A

**** MEMBER PROPERTIES ****

MEMBER	AREA (IN^2)	INERTIA (IN^4)	ELASTICITY (K/IN^2)
1	1000.00	0.00	29000.0
2	14.00	0.67	29000.0
3	3.56	3.02	29000.0
4	100.00	0.00	29000.0
6	14.00	0.67	29000.0
7	1.57	0.00	29000.0
8	4.00	0.00	29000.0
17	1.25	0.48	29000.0
31	2.87	2.48	29000.0
32	2.87	2.48	29000.0
61	1.52	0.58	29000.0
62	0.83	0.02	29000.0

**** LOADING 1 **** DL+LL

** JOINT LOADS **

JOINT	FORCE X (K)	FORCE Y (K)	MOMENT Z (FT-K)
1	0.00	0.00	0.00
2	0.00	0.00	0.00
3	0.00	0.00	0.00
4	0.00	0.00	0.00
5	0.00	0.00	0.00
6	-8.93	-15.24	0.00
7	0.00	0.00	0.00
8	0.00	0.00	0.00
9	0.00	0.00	0.00
10	0.00	0.00	0.00

Figure E.2 Stiffness Analysis, Test CB-1A, Continued

```
************************
* RESULTS OF ANALYSIS *
************************
```

JOB NAME: VULCRAFT CB-1 & CB-2 FRAME, (WORKING LOAD=17.66 KIPS)
LOADING 1 DL+LL

***** JOINT DISPLACEMENTS *****

JOINT	X-DIR. (IN)	Y-DIR. (IN)	Z-DIR. (RAD)
1	0.0000	0.0000	0.0004
2	0.0000	-0.0016	0.0008
3	0.0000	-0.0066	-0.0011
4	0.0012	-0.0081	0.0004
5	-0.0083	-0.0086	-0.0003
6	-0.0075	-0.0127	-0.0001
7	0.0000	0.0000	0.0023
8	0.0000	0.0000	0.0004
9	0.0000	-0.0004	-0.0008
10	0.0000	0.0000	-0.0004

***** REACTIONS *****

JOINT	FORCE X (K)	FORCE Y (K)	MOMENT Z (FT-K)
1	4.953	0.000	0.000
7	3.977	-2.327	0.000
8	0.000	9.954	0.000
10	0.000	7.613	0.000

Figure E.2 Stiffness Analysis, Test CB-1A
Continued

***** MEMBER END ACTIONS -- LOCAL COORDINATES *****

MEMBER	JOINT	AXIAL (K)	SHEAR (K)	MOMENT (FT-K)
1	1	4.95	0.00	0.00
	9	-4.95	0.00	0.00
2	2	-3.29	-3.58	-0.05
	9	3.29	3.58	-1.23
3	5	2.68	0.30	0.14
	6	-2.68	-0.30	0.26
4	6	-4.61	0.00	0.00
	7	4.61	0.00	0.00
6	9	1.67	6.38	1.23
	3	-1.67	-6.38	1.05
7	9	9.95	0.00	0.00
	8	-9.95	0.00	0.00
8	2	7.61	0.00	0.00
	10	-7.61	0.00	0.00
17	2	6.37	0.00	0.04
	5	-6.37	0.00	-0.02
31	4	16.65	-0.12	-0.03
	6	-16.65	0.12	-0.26
32	3	6.55	-0.74	-1.05
	4	-6.55	0.74	0.06
61	4	-5.81	-0.07	-0.04
	5	5.81	0.07	-0.12
62	2	5.84	0.01	0.01
	4	-5.84	-0.01	0.01

Figure E.2 Stiffness Analysis, Test CB-1A, Continued

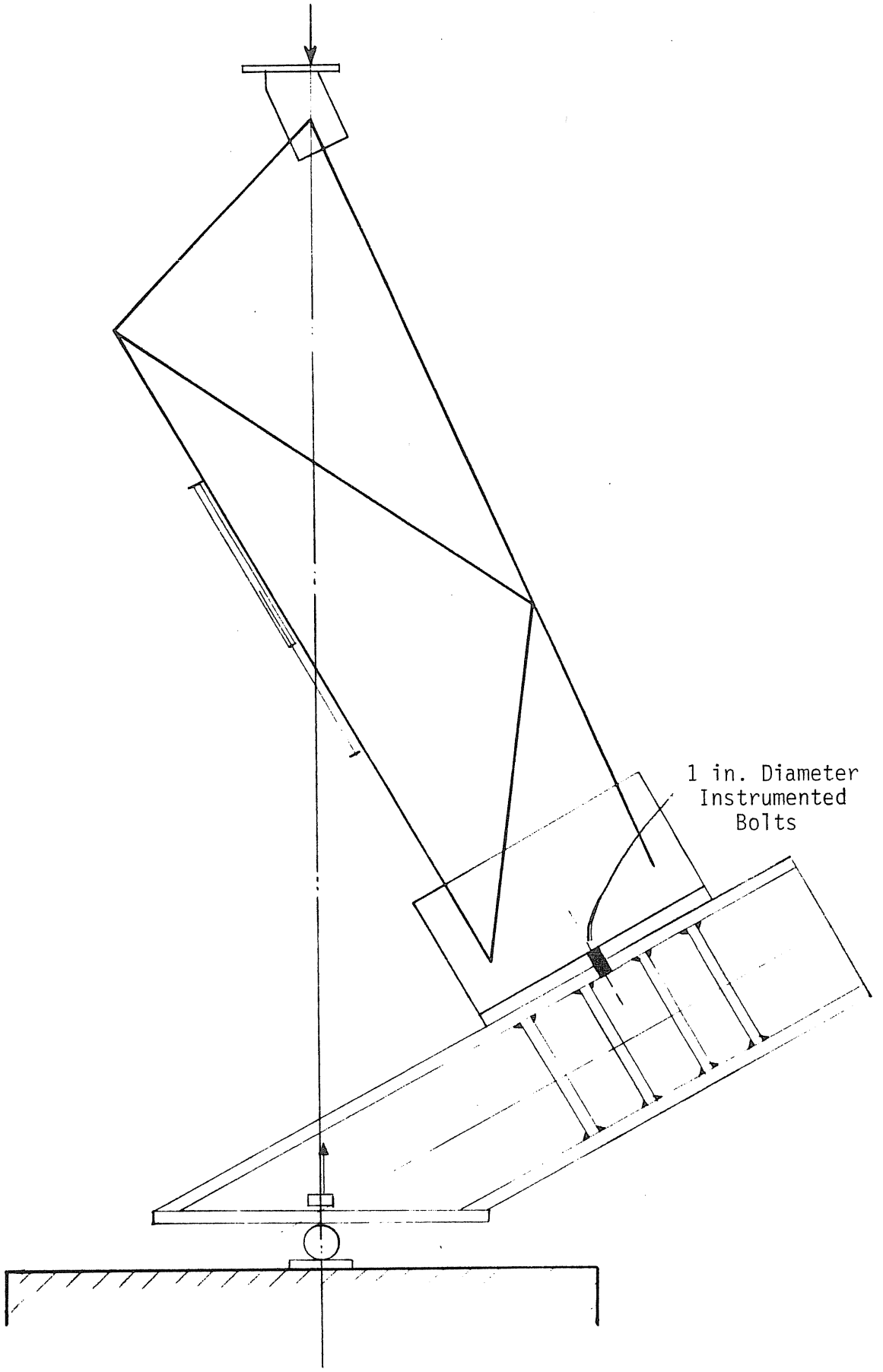

Figure E.3 Test Setup, Test CB-1A

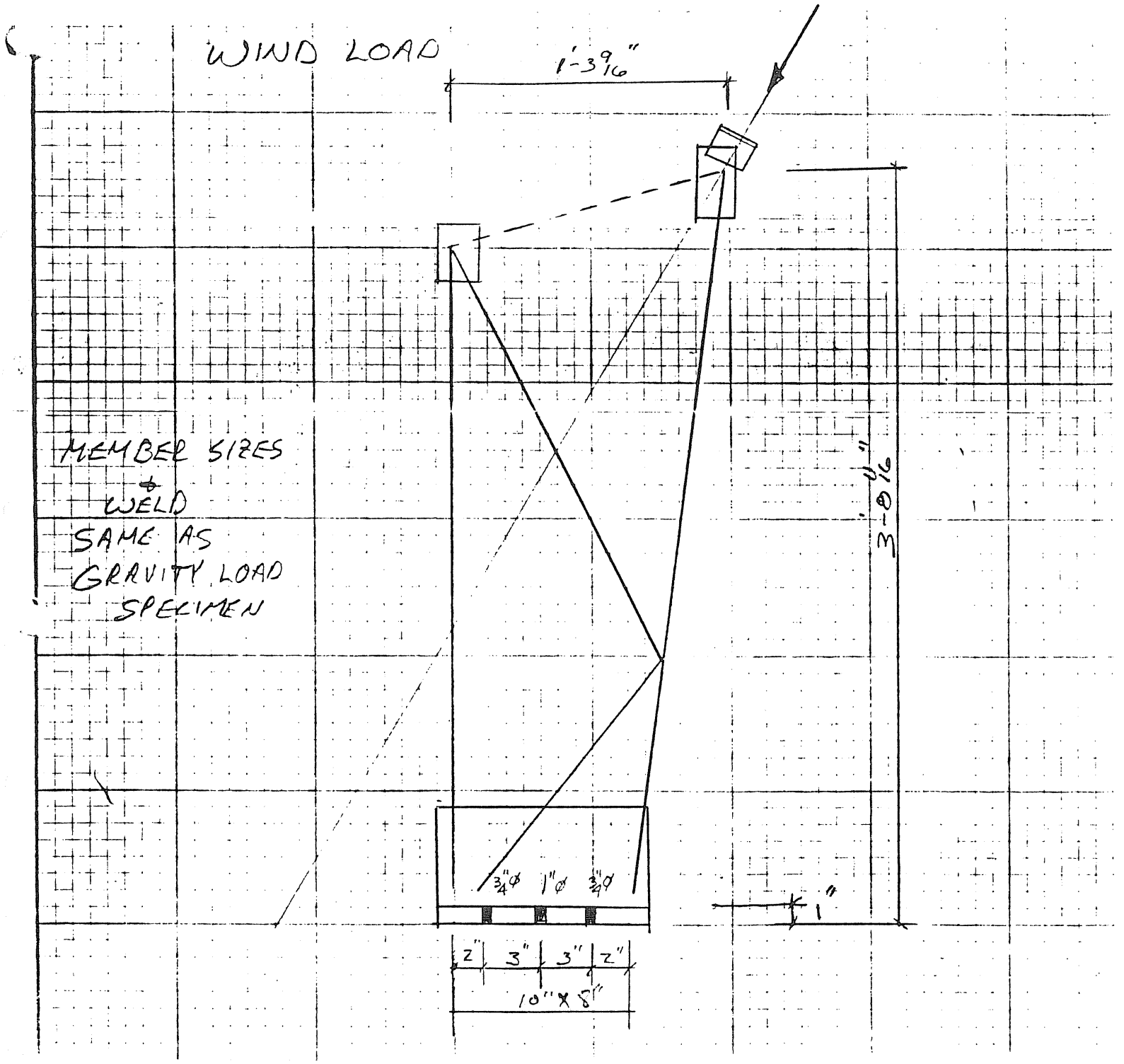

Figure E.4 Shop Details, Test CB-1A

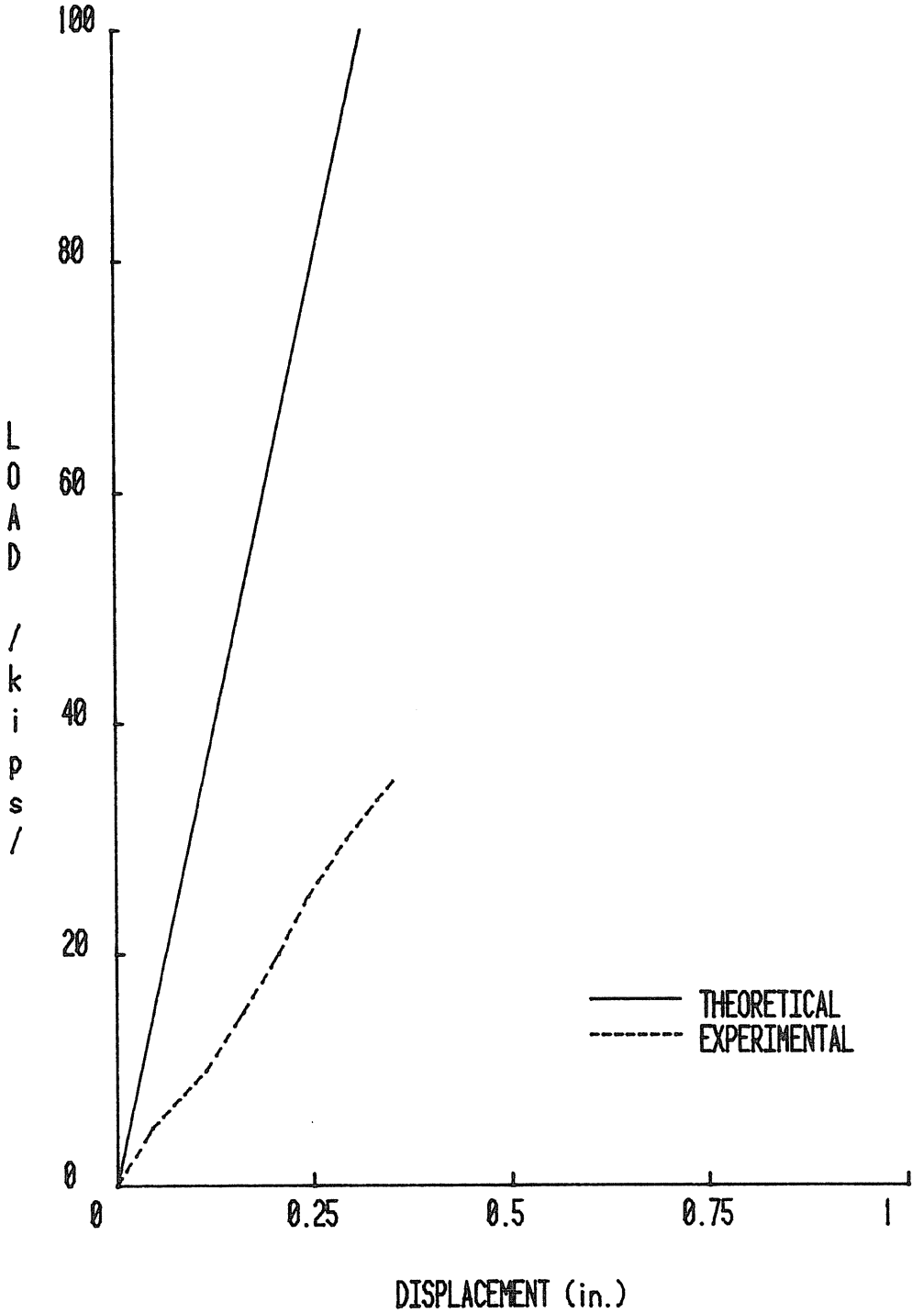

Figure E.5 Load vs. Displ. in Load Direction, CB-1A

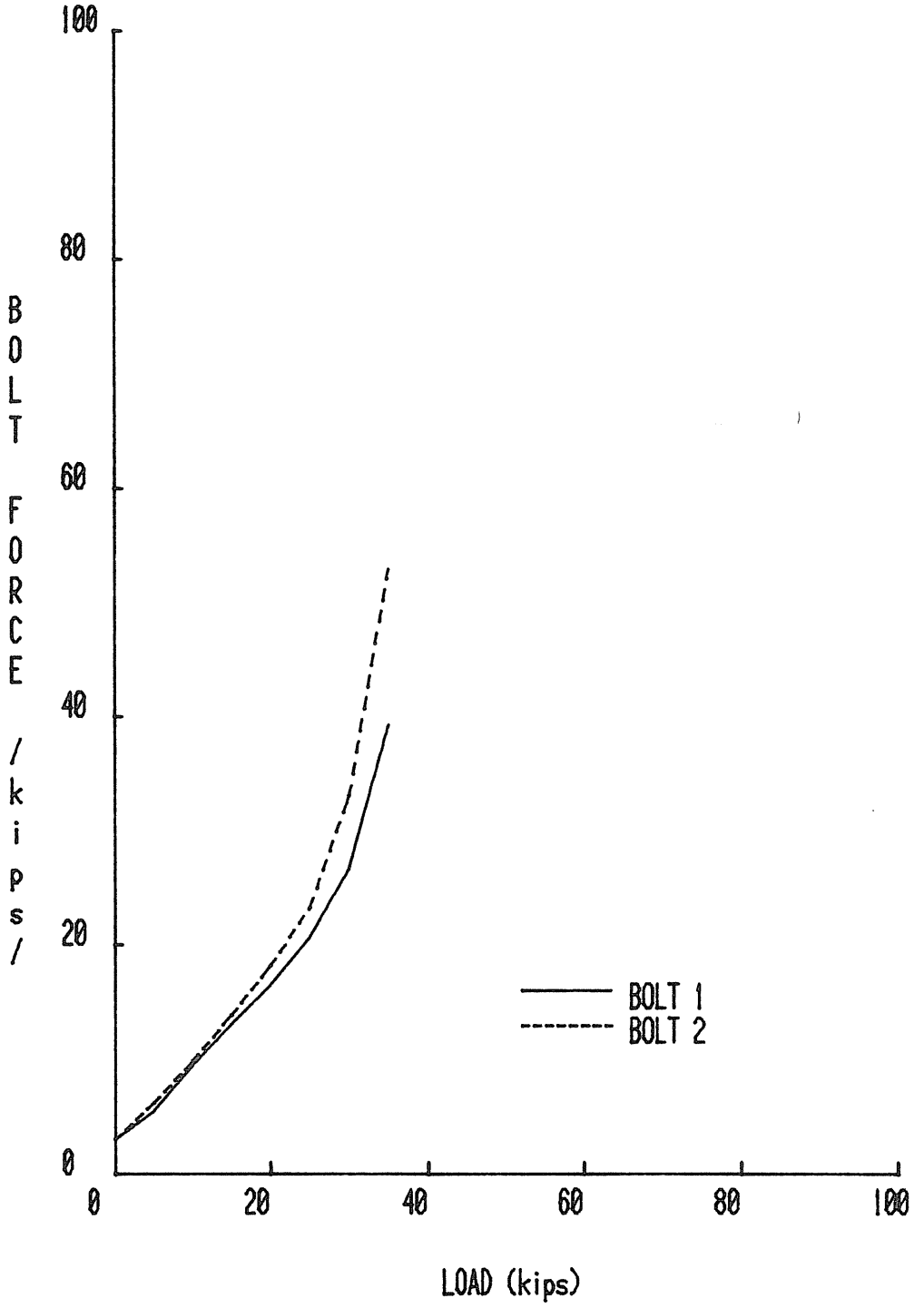

Figure E.6 Bolt Force vs. Load, CB-1A

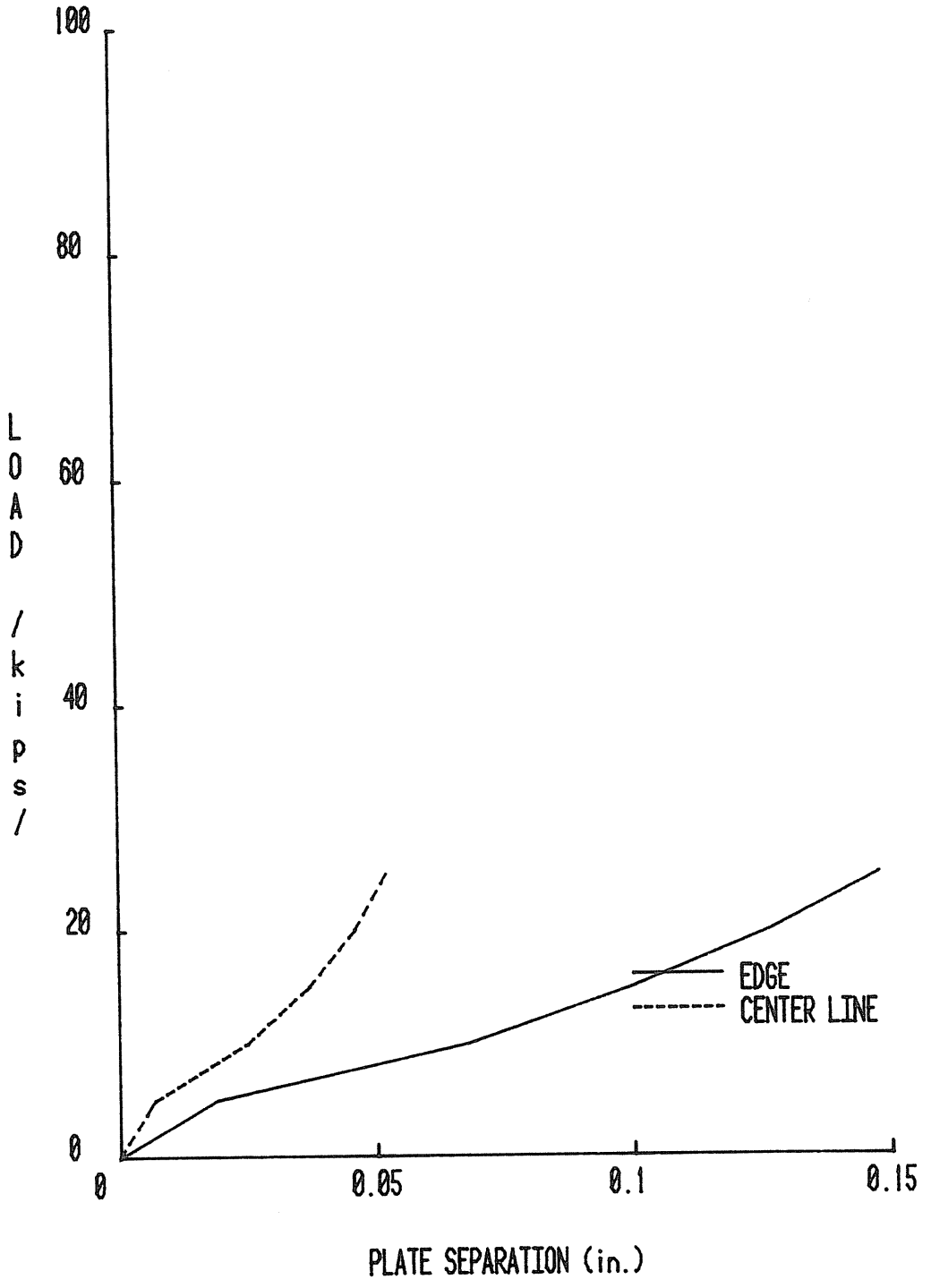

Figure E.7 Load vs. Plate Separation, CB-1A

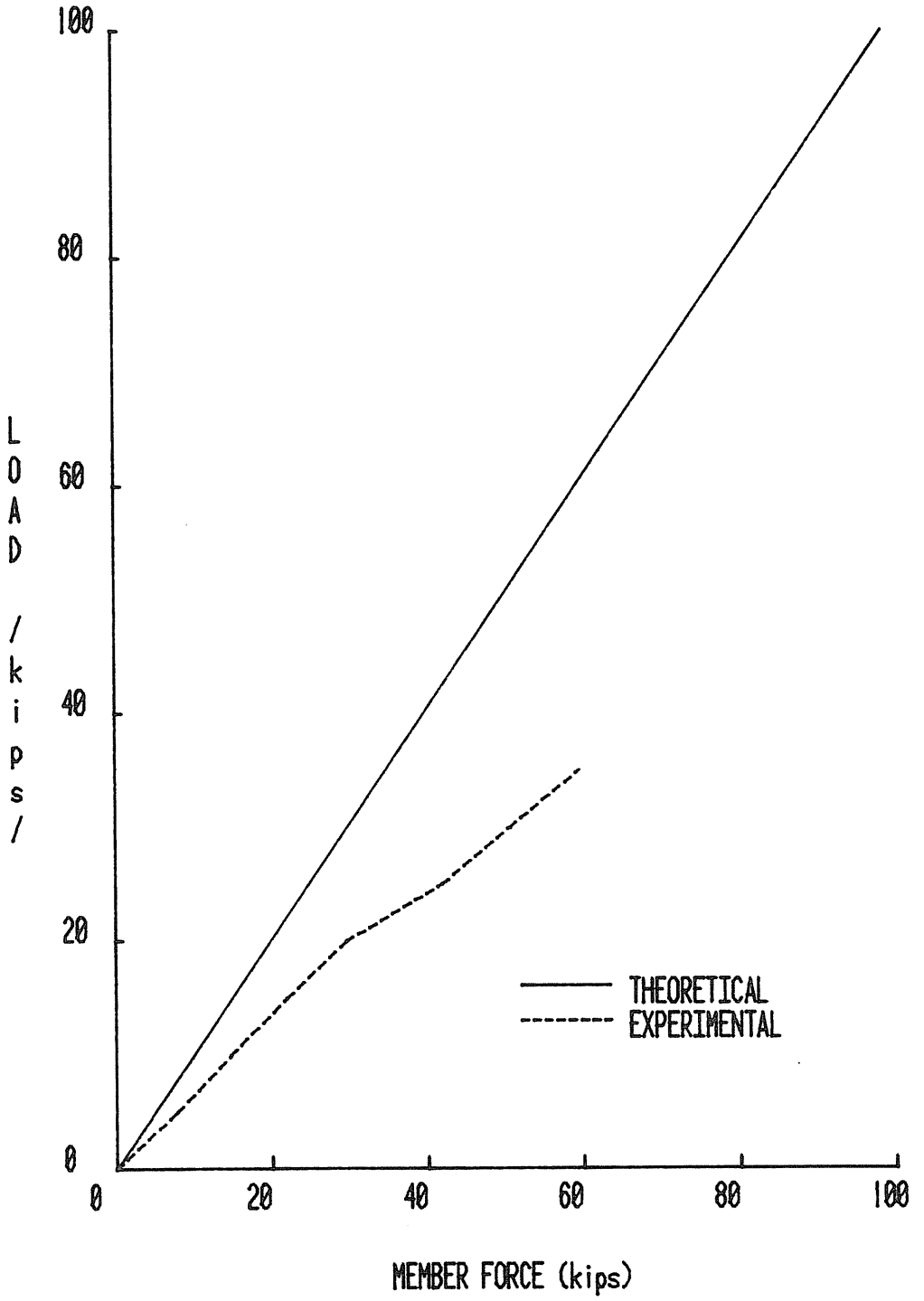

Figure E.8 Load vs. Member (#17) Force, CB-1A

VULCRAFT COLUMN BASE TEST SUMMARY

Project: VULCRAFT

Test No.: CB-1B (Same as CB-1A except pretension bolts to 25 kips)

Test Date: 6/8/84

Purpose: Study of Behavior of Column Base for Wind Loading

Load Eccentricity: 10.59"

Base Plate Dimensions: 8x12x1 inch

Anchor Bolt Diameter: 1" No. of Anchor Bolts: 2"

Pretension Force per Anchor Bolt: 25 kips

Failure Load: 37.5 kips

Failure Mode: Excessive bolt force

Predicted Failure Loads:

Method:	Vulcraft Analysis	Load:	17.66x1.66 = 29.31 kips
Method:		Load:	
Method:		Load:	
Method:		Load:	

Maximum Displ. in Load Direction: 0.221" @ 37.5 kips

Maximum Plate Separation: 0.063" @ 37.5 kips

Discussion:

Observations:

-This test was identical to Test CB-1A, except bolts were pretension to 25 kips to prevent excessive plate separation.

-Failure occurred at 37.5 kips due to bolt yielding.

-Plate separation was very small compared to Test CB-1A.

-At 35 kips, plate separation was 0.05 in., which is about 20% of Test CB-1A for the same load.

Loading:

-Maximum applied load was 37.5 kips.

-Maximum bolt force was 69.5 for bolt #1 (North side bolt) at 30 kips applied load.

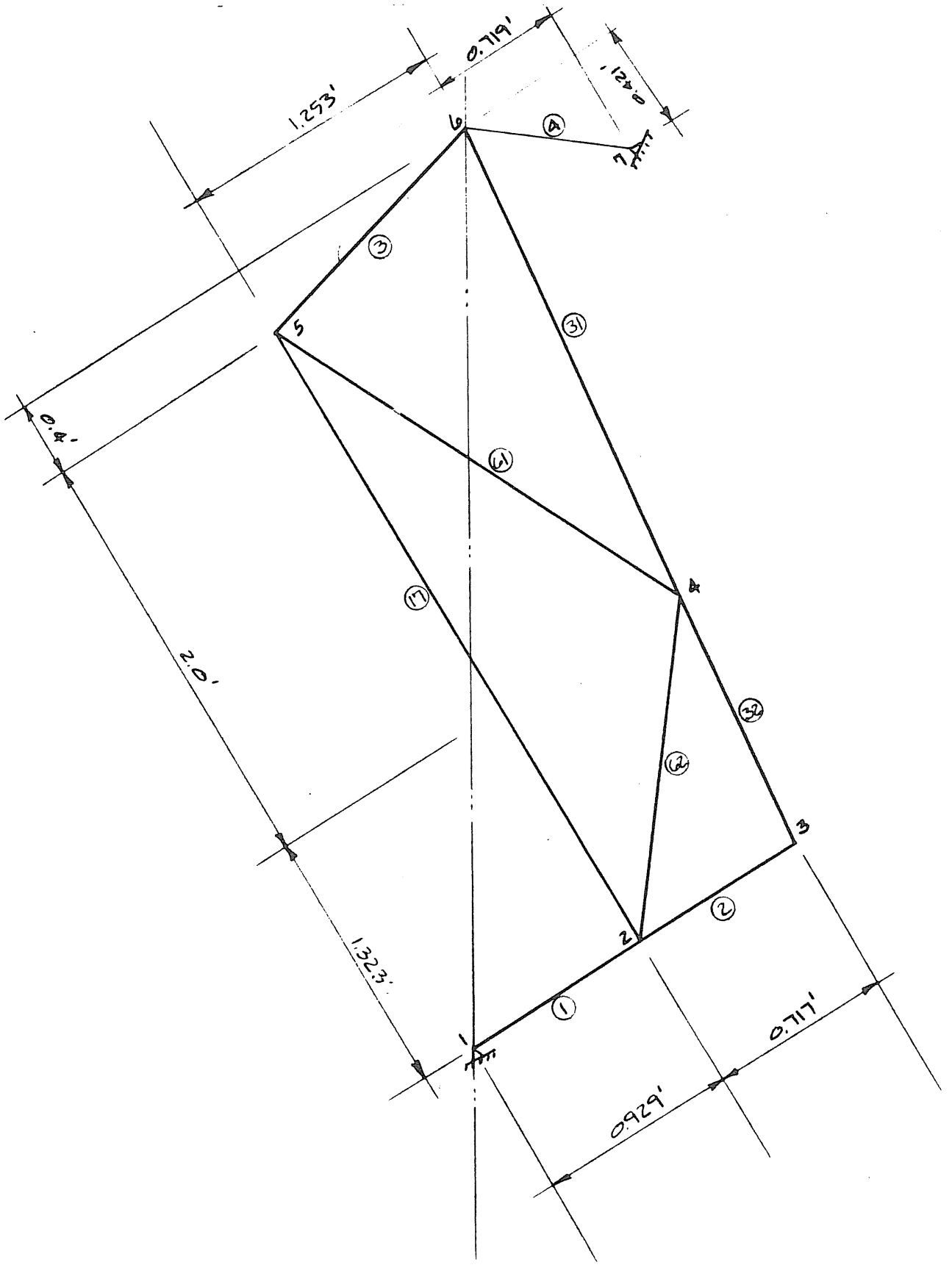

Figure E.9 Specimen Geometry, Test CB-1B

```
*************************************************************
                    STIFFNESS ANALYSIS
                         ØF
                     PLANE FRAMES
*************************************************************
```

JOB NAME: VULCRAFT CB-1 & CB-2 FRAME, (WORKING LOAD=17.66 KIPS)

**** JOINT COORDINATES ****

JOINT	X-COORD (FT.)	Y-COORD (FT.)
1	-0.929	0.000
2	0.000	0.000
3	0.717	0.000
4	0.907	1.323
5	0.000	3.323
6	1.253	3.723
7	1.972	3.302
8	0.359	-0.167
9	0.359	0.000
10	0.000	-2.000

**** SUPPORT CONDITIONS ****

SUPPORT	X-DIR.	Y-DIR.	Z-DIR.
1	1	1	0
7	1	1	0
8	1	1	0
10	1	1	0

**** MEMBER INCIDENCES ****

MEMBER	I JOINT	J JOINT
1	1	9
2	2	9
3	5	6
4	6	7
6	9	3
7	9	8
8	2	10
17	2	5
31	4	6
32	3	4
61	4	5
62	2	4

Figure E.10 Stiffness Analysis, Test CB-1B,

**** MEMBER PROPERTIES ****

MEMBER	AREA (IN^2)	INERTIA (IN^4)	ELASTICITY (K/IN^2)
1	1000.00	0.00	29000.0
2	14.00	0.67	29000.0
3	3.56	3.02	29000.0
4	100.00	0.00	29000.0
6	14.00	0.67	29000.0
7	1.57	0.00	29000.0
8	4.00	0.00	29000.0
17	1.25	0.48	29000.0
31	2.87	2.48	29000.0
32	2.87	2.48	29000.0
61	1.52	0.58	29000.0
62	0.83	0.02	29000.0

**** LOADING 1 **** DL+LL

** JOINT LOADS **

JOINT	FORCE X (K)	FORCE Y (K)	MOMENT Z (FT-K)
1	0.00	0.00	0.00
2	0.00	0.00	0.00
3	0.00	0.00	0.00
4	0.00	0.00	0.00
5	0.00	0.00	0.00
6	-8.93	-15.24	0.00
7	0.00	0.00	0.00
8	0.00	0.00	0.00
9	0.00	0.00	0.00
10	0.00	0.00	0.00

Figure E.10 Stiffness Analysis, Test CB-1B, Continued

```
************************
* RESULTS OF ANALYSIS *
************************
```

JOB NAME: VULCRAFT CB-1 & CB-2 FRAME, (WORKING LOAD=17.66 KIPS)
LOADING 1 DL+LL

***** JOINT DISPLACEMENTS *****

JOINT	X-DIR. (IN)	Y-DIR. (IN)	Z-DIR. (RAD)
1	0.0000	0.0000	0.0004
2	0.0000	-0.0016	0.0008
3	0.0000	-0.0066	-0.0011
4	0.0012	-0.0081	0.0004
5	-0.0083	-0.0086	-0.0003
6	-0.0075	-0.0127	-0.0001
7	0.0000	0.0000	0.0023
8	0.0000	0.0000	0.0004
9	0.0000	-0.0004	-0.0008
10	0.0000	0.0000	-0.0004

***** REACTIONS *****

JOINT	FORCE X (K)	FORCE Y (K)	MOMENT Z (FT-K)
1	4.953	0.000	0.000
7	3.977	-2.327	0.000
8	0.000	9.954	0.000
10	0.000	7.613	0.000

Figure E.10 Stiffness Analysis, Test CB-1B, Continued

***** MEMBER END ACTIONS -- LOCAL COORDINATES *****

MEMBER	JOINT	AXIAL (K)	SHEAR (K)	MOMENT (FT-K)
1	1	4.95	0.00	0.00
	9	-4.95	0.00	0.00
2	2	-3.29	-3.58	-0.05
	9	3.29	3.58	-1.23
3	5	2.68	0.30	0.14
	6	-2.68	-0.30	0.26
4	6	-4.61	0.00	0.00
	7	4.61	0.00	0.00
6	9	1.67	6.38	1.23
	3	-1.67	-6.38	1.05
7	9	9.95	0.00	0.00
	8	-9.95	0.00	0.00
8	2	7.61	0.00	0.00
	10	-7.61	0.00	0.00
17	2	6.37	0.00	0.04
	5	-6.37	0.00	-0.02
31	4	16.65	-0.12	-0.03
	6	-16.65	0.12	-0.26
32	3	6.55	-0.74	-1.05
	4	-6.55	0.74	0.06
61	4	-5.81	-0.07	-0.04
	5	5.81	0.07	-0.12
62	2	5.84	0.01	0.01
	4	-5.84	-0.01	0.01

Figure E.10 Stiffness Analysis, Test CB-1B, Continued

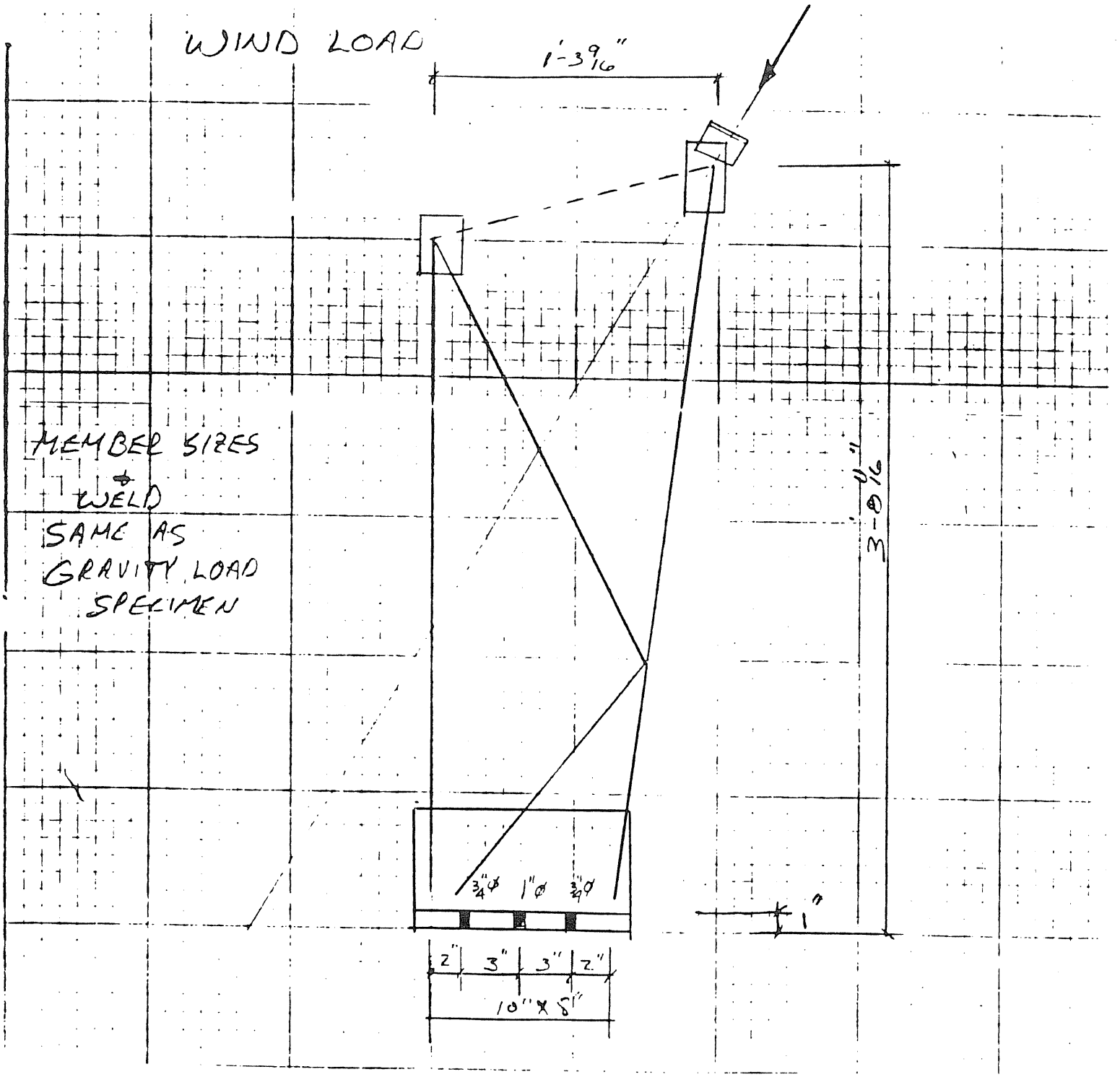

Figure E.12 Shop Details, Test CB-1B

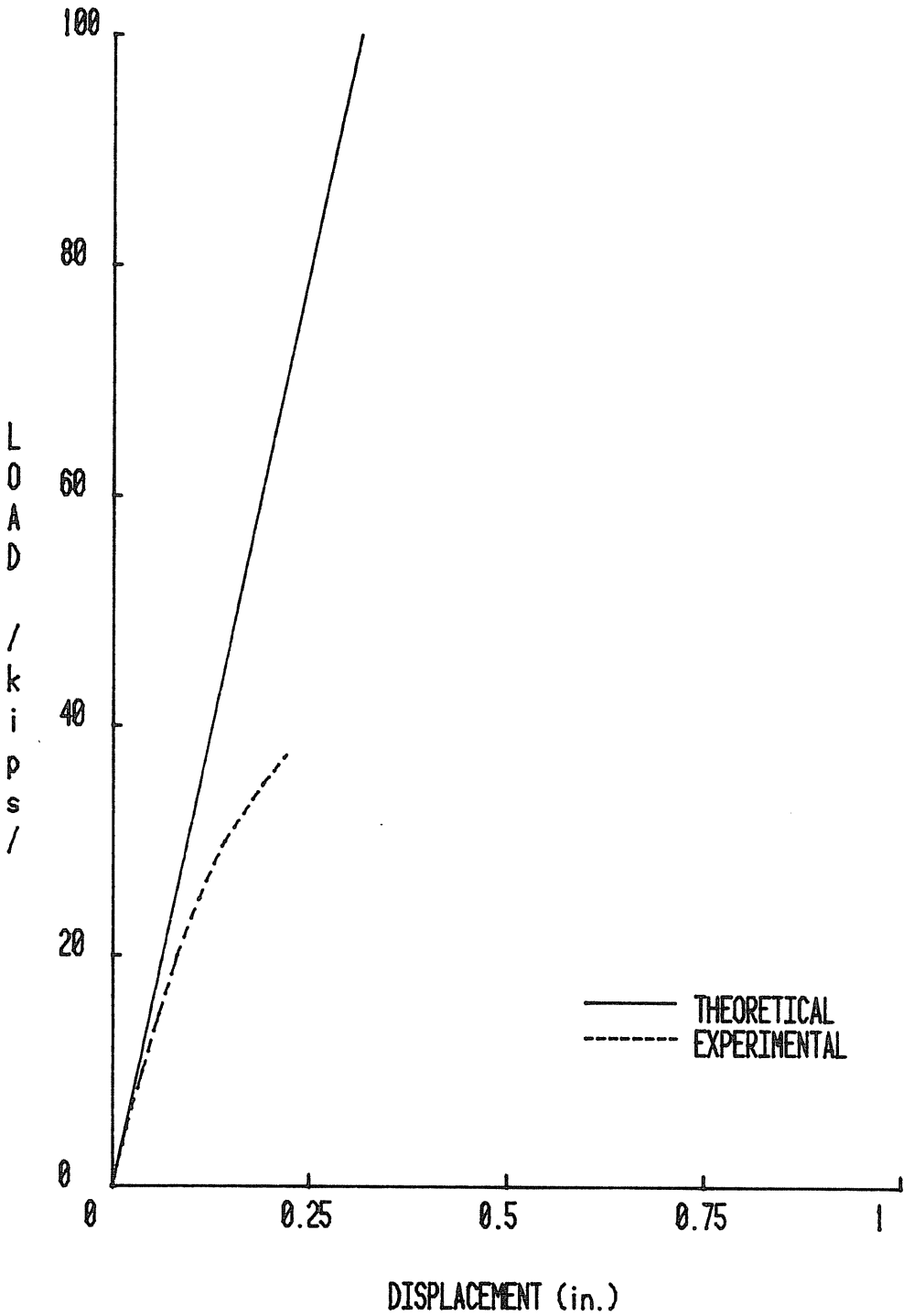

Figure E.13 Load vs. Displ. in Load Direction, CB-1B

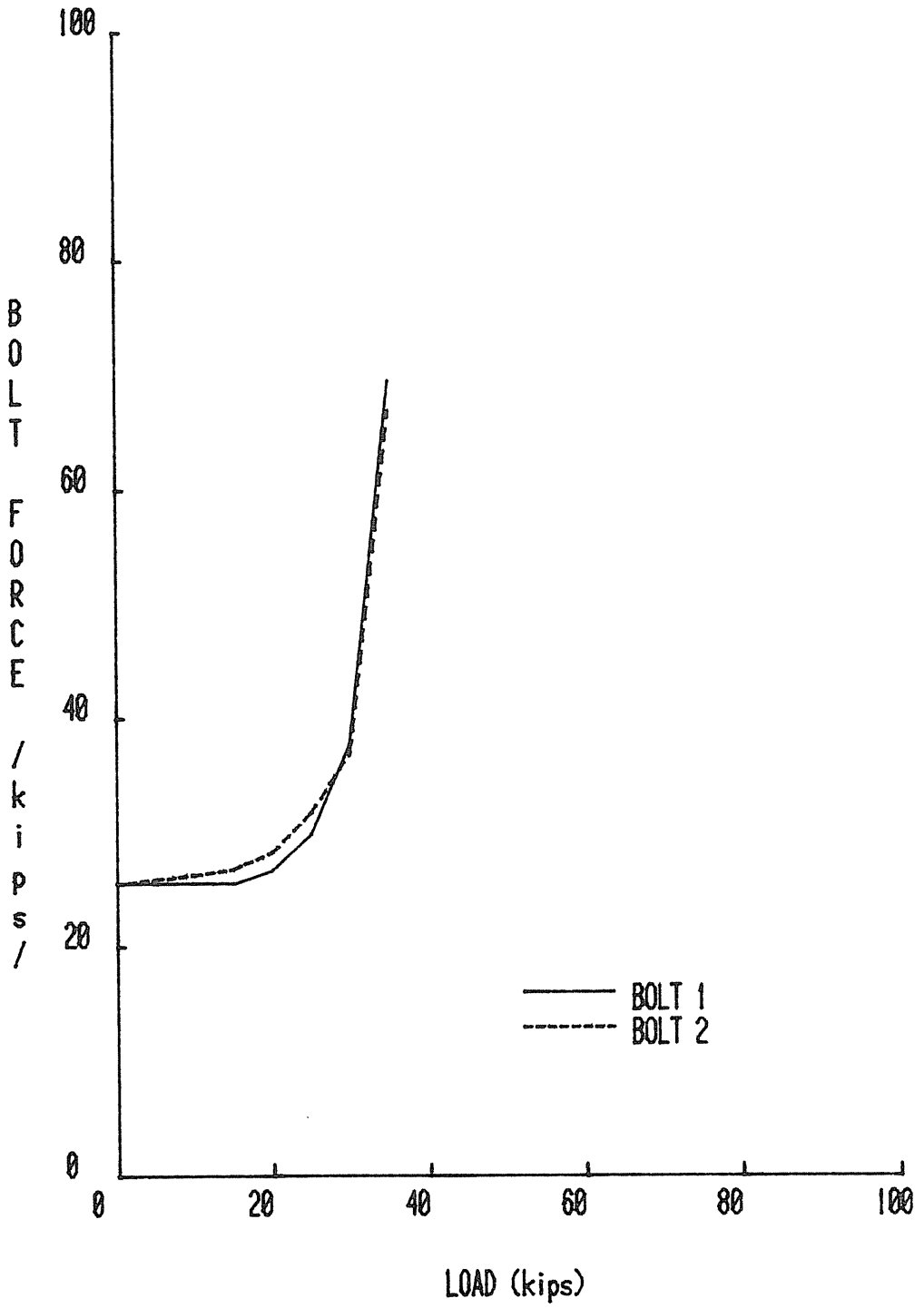

Figure E.14 Bolt vs. Load, CB-1B

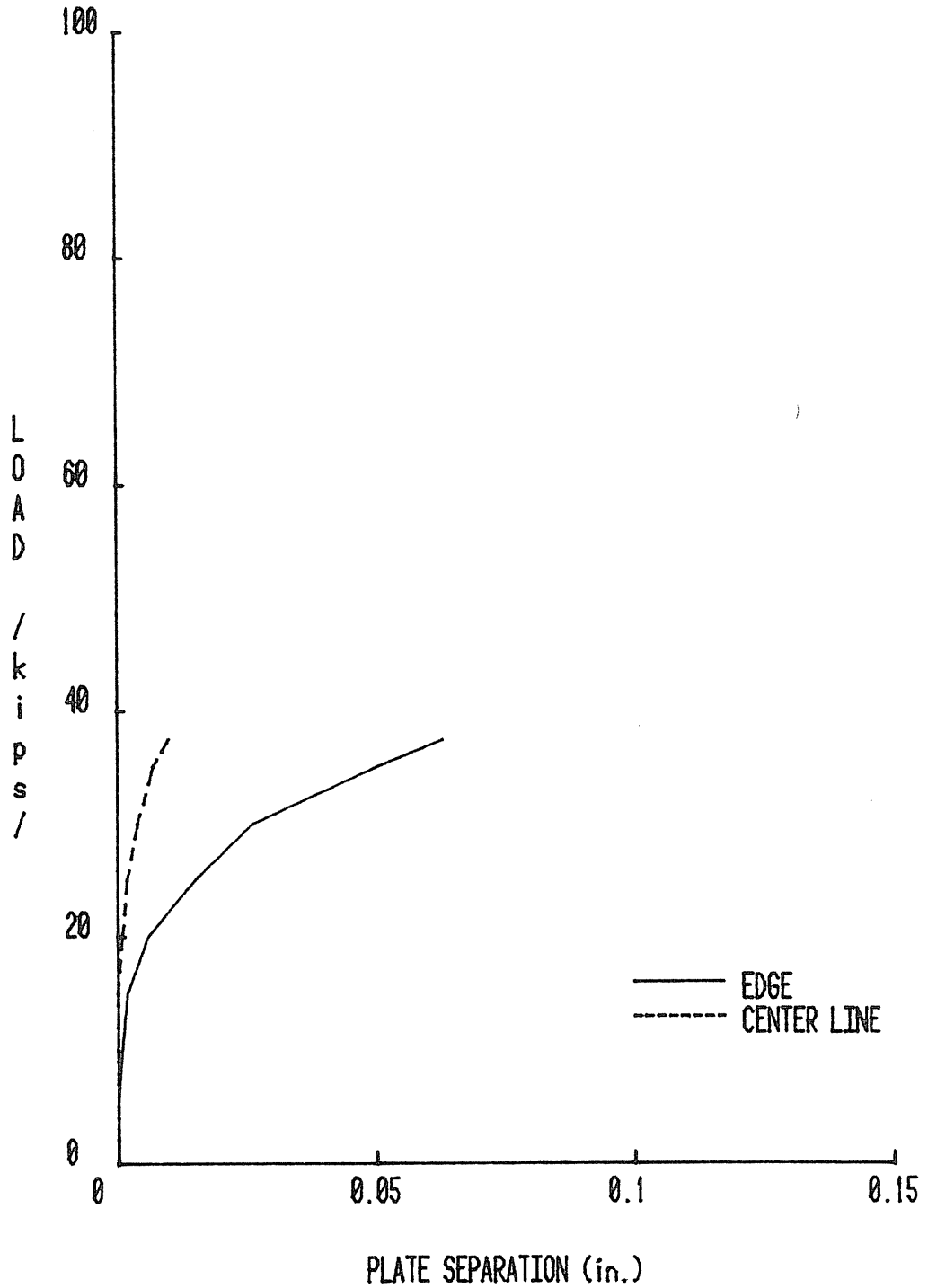

Figure E.15 Load vs. Plate Separation, CB-1B

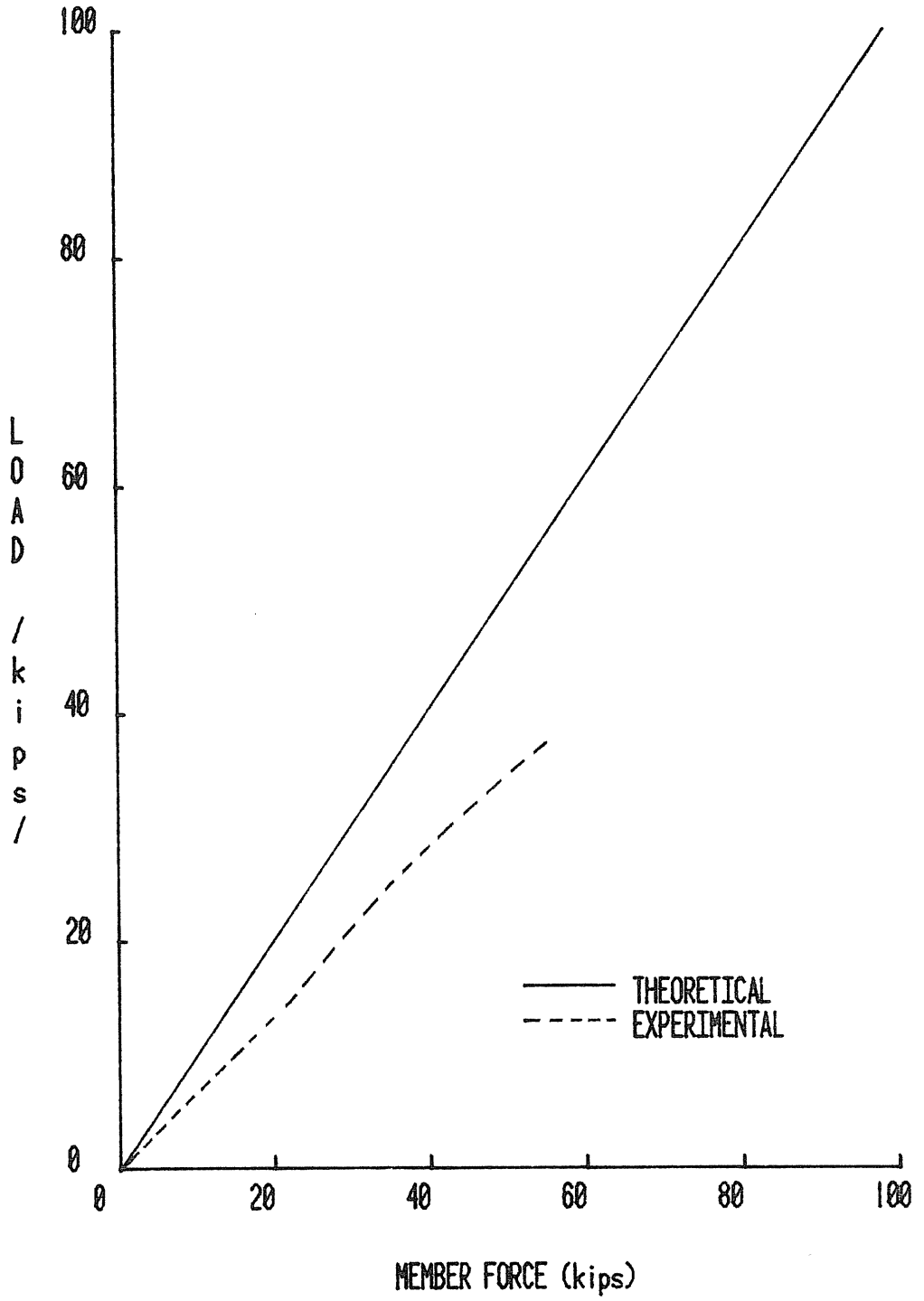

Figure E.16 Load vs. Member (#17) Force, CB-1B

VULCRAFT COLUMN BASE TEST SUMMARY

Project: VULCRAFT

Test No.: CB-2

Test Date: 6/18/84

Purpose: Study of Behavior of Column Base for Wind Loading

Load Eccentricity: 10.59"

Base Plate Dimensions: 8x12x1 inch

Anchor Bolt Diameter: 3/4" **No. of Anchor Bolts:** 4

Pretension Force per Anchor Bolt: 4 kips

Failure Load: 55 kips

Failure Mode: Buckling of compression member (#17)

Predicted Failure Loads:

Method:	Vulcraft Analysis	**Load:**	17.66x1.66 = 29.31 kips
Method:		**Load:**	
Method:		**Load:**	
Method:		**Load:**	

Maximum Displ. in Load Direction: 0.533" @ 55 kips

Maximum Plate Separation: 0.123" @ 55 kips

Discussion:

Observations:

-Failure occurred at 55 kips by failure of compression angle, single angle buckling (member #17).

-At 30 kips yielding was detected at compression angle next to the base plate.

-At 40 kips severe yielding occurred on diagonal member at base.

-At 50 kips severe yielding at tension angles adjacent to stem of base plate.

Loading:

-Maximum applied laod was 55 kips.

-Maximum bolt force was 28.9 kips (North side) at 55 kips applied load.

-Only one bolt force was measured.

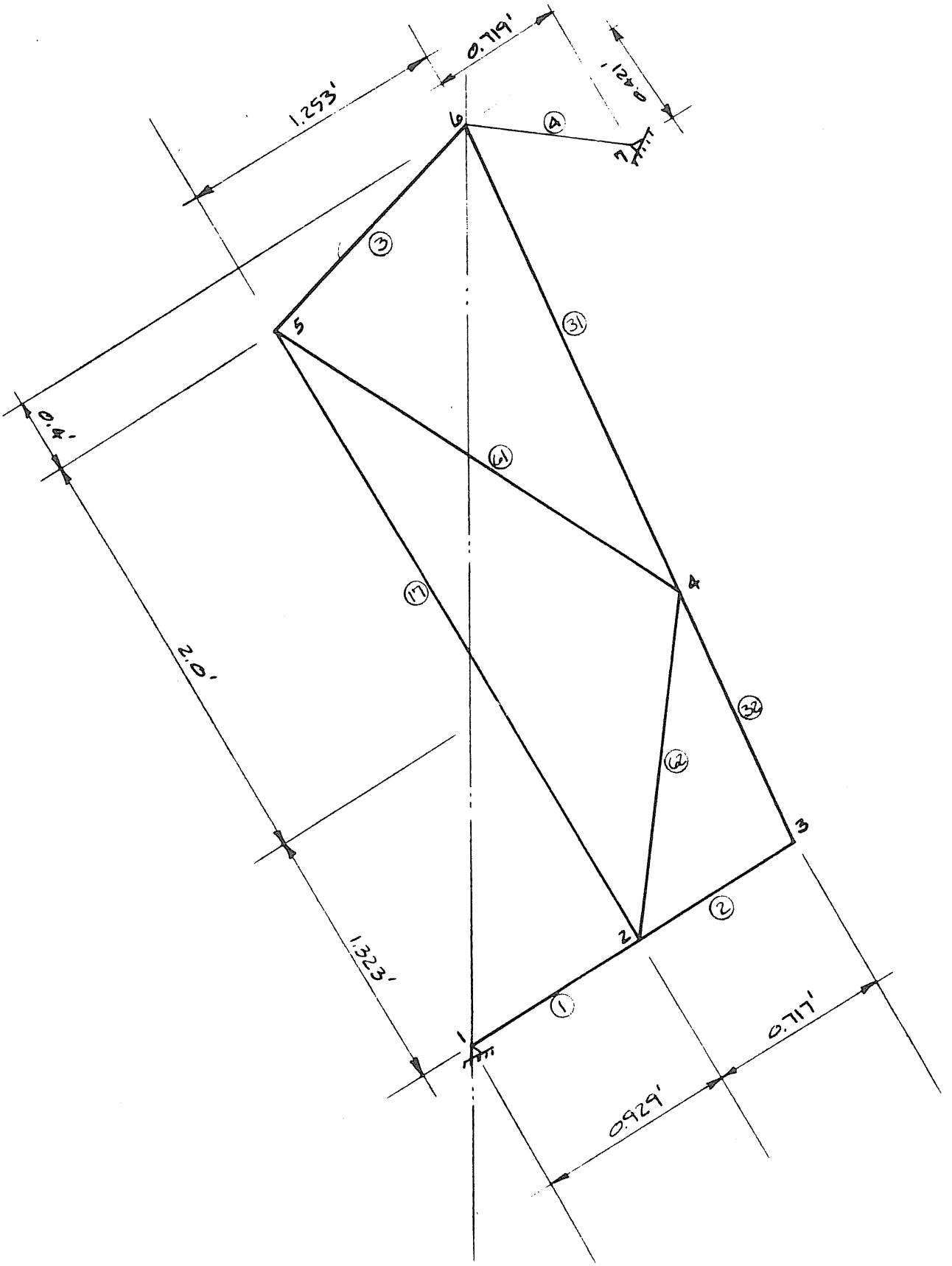

Figure E.17 Specimen Geometry, Test CB-2

```
*****************************************************************
                    STIFFNESS ANALYSIS
                         ØF
                    PLANE FRAMES
*****************************************************************

 JOB NAME: VULCRAFT CB-1 & CB-2 FRAME, (WORKING LOAD=17.66 KIPS)
```

**** JOINT COORDINATES ****

JOINT	X-COORD (FT.)	Y-COORD (FT.)
1	-0.929	0.000
2	0.000	0.000
3	0.717	0.000
4	0.907	1.323
5	0.000	3.323
6	1.253	3.723
7	1.972	3.302
8	0.359	-0.167
9	0.359	0.000
10	0.000	-2.000

**** SUPPORT CONDITIONS ****

SUPPORT	X-DIR.	Y-DIR.	Z-DIR.
1	1	1	0
7	1	1	0
8	1	1	0
10	1	1	0

**** MEMBER INCIDENCES ****

MEMBER	I JOINT	J JOINT
1	1	9
2	2	9
3	5	6
4	6	7
6	9	3
7	9	8
8	2	10
17	2	5
31	4	6
32	3	4
61	4	5
62	2	4

Figure E.18 Stiffness Analysis, Test CB-2,

**** MEMBER PROPERTIES ****

MEMBER	AREA (IN^2)	INERTIA (IN^4)	ELASTICITY (K/IN^2)
1	1000.00	0.00	29000.0
2	14.00	0.67	29000.0
3	3.56	3.02	29000.0
4	100.00	0.00	29000.0
6	14.00	0.67	29000.0
7	1.57	0.00	29000.0
8	4.00	0.00	29000.0
17	1.25	0.48	29000.0
31	2.87	2.48	29000.0
32	2.87	2.48	29000.0
61	1.52	0.58	29000.0
62	0.83	0.02	29000.0

**** LOADING 1 **** DL+LL

** JOINT LOADS **

JOINT	FORCE X (K)	FORCE Y (K)	MOMENT Z (FT-K)
1	0.00	0.00	0.00
2	0.00	0.00	0.00
3	0.00	0.00	0.00
4	0.00	0.00	0.00
5	0.00	0.00	0.00
6	-8.93	-15.24	0.00
7	0.00	0.00	0.00
8	0.00	0.00	0.00
9	0.00	0.00	0.00
10	0.00	0.00	0.00

Figure E.18 Stiffness Analysis, Test CB-2
Continued

```
************************
* RESULTS OF ANALYSIS *
************************
```

JOB NAME: VULCRAFT CB-1 & CB-2 FRAME, (WORKING LOAD=17.66 KIPS)
LOADING 1 DL+LL

***** JOINT DISPLACEMENTS *****

JOINT	X-DIR. (IN)	Y-DIR. (IN)	Z-DIR. (RAD)
1	0.0000	0.0000	0.0004
2	0.0000	-0.0016	0.0008
3	0.0000	-0.0066	-0.0011
4	0.0012	-0.0081	0.0004
5	-0.0083	-0.0086	-0.0003
6	-0.0075	-0.0127	-0.0001
7	0.0000	0.0000	0.0023
8	0.0000	0.0000	0.0004
9	0.0000	-0.0004	-0.0008
10	0.0000	0.0000	-0.0004

***** REACTIONS *****

JOINT	FORCE X (K)	FORCE Y (K)	MOMENT Z (FT-K)
1	4.953	0.000	0.000
7	3.977	-2.327	0.000
8	0.000	9.954	0.000
10	0.000	7.613	0.000

Figure E.18 Stiffness Analysis, Test CB-2, Continued

***** MEMBER END ACTIONS -- LOCAL COORDINATES *****

MEMBER	JOINT	AXIAL (K)	SHEAR (K)	MOMENT (FT-K)
1	1	4.95	0.00	0.00
	9	-4.95	0.00	0.00
2	2	-3.29	-3.58	-0.05
	9	3.29	3.58	-1.23
3	5	2.68	0.30	0.14
	6	-2.68	-0.30	0.26
4	6	-4.61	0.00	0.00
	7	4.61	0.00	0.00
6	9	1.67	6.38	1.23
	3	-1.67	-6.38	1.05
7	9	9.95	0.00	0.00
	8	-9.95	0.00	0.00
8	2	7.61	0.00	0.00
	10	-7.61	0.00	0.00
17	2	6.37	0.00	0.04
	5	-6.37	0.00	-0.02
31	4	16.65	-0.12	-0.03
	6	-16.65	0.12	-0.26
32	3	6.55	-0.74	-1.05
	4	-6.55	0.74	0.06
61	4	-5.81	-0.07	-0.04
	5	5.81	0.07	-0.12
62	2	5.84	0.01	0.01
	4	-5.84	-0.01	0.01

Figure E.18 Stiffness Analysis, Test CB-2, Continued

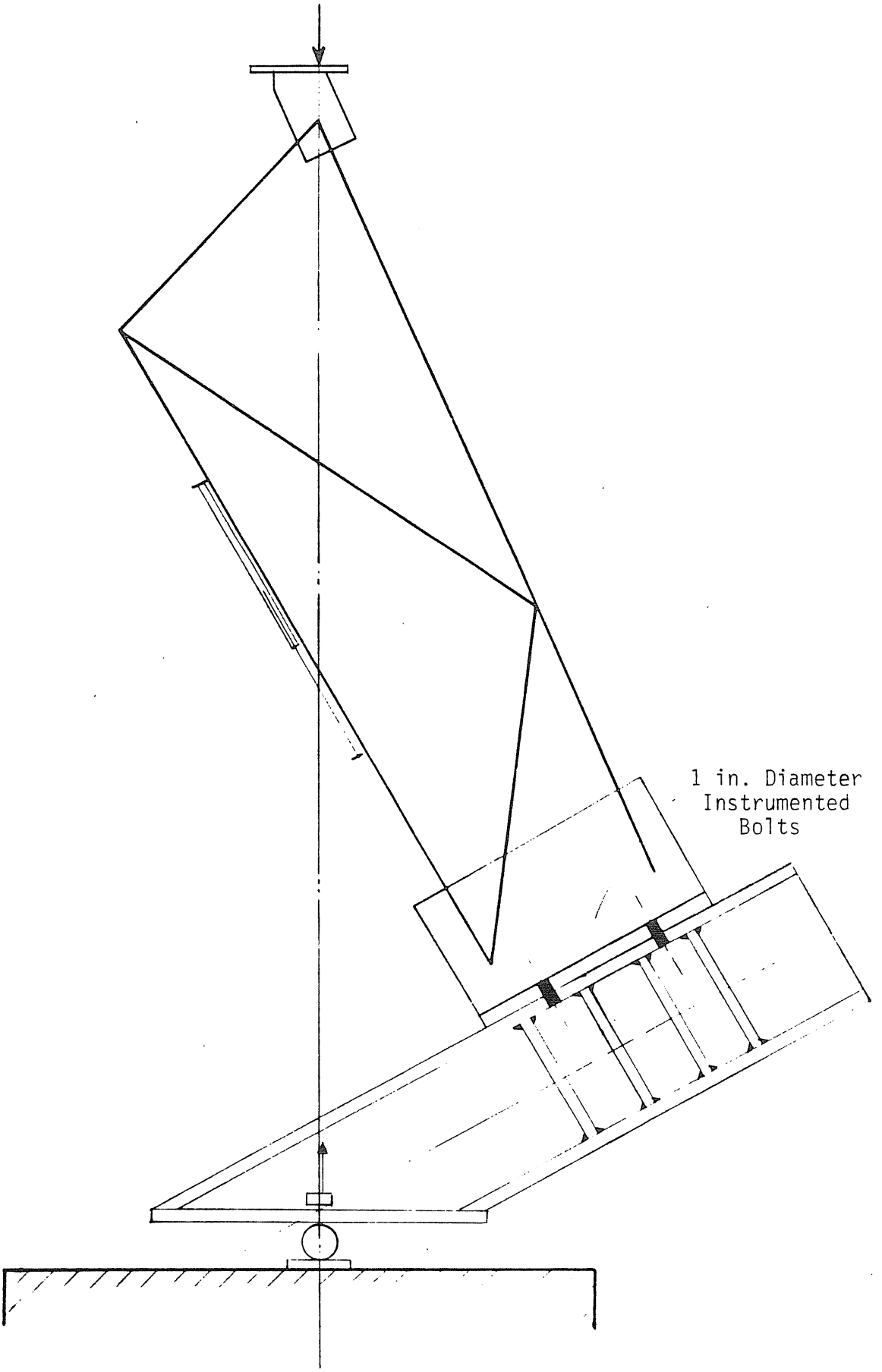

Figure E.19 Test Setup, Test CB-2

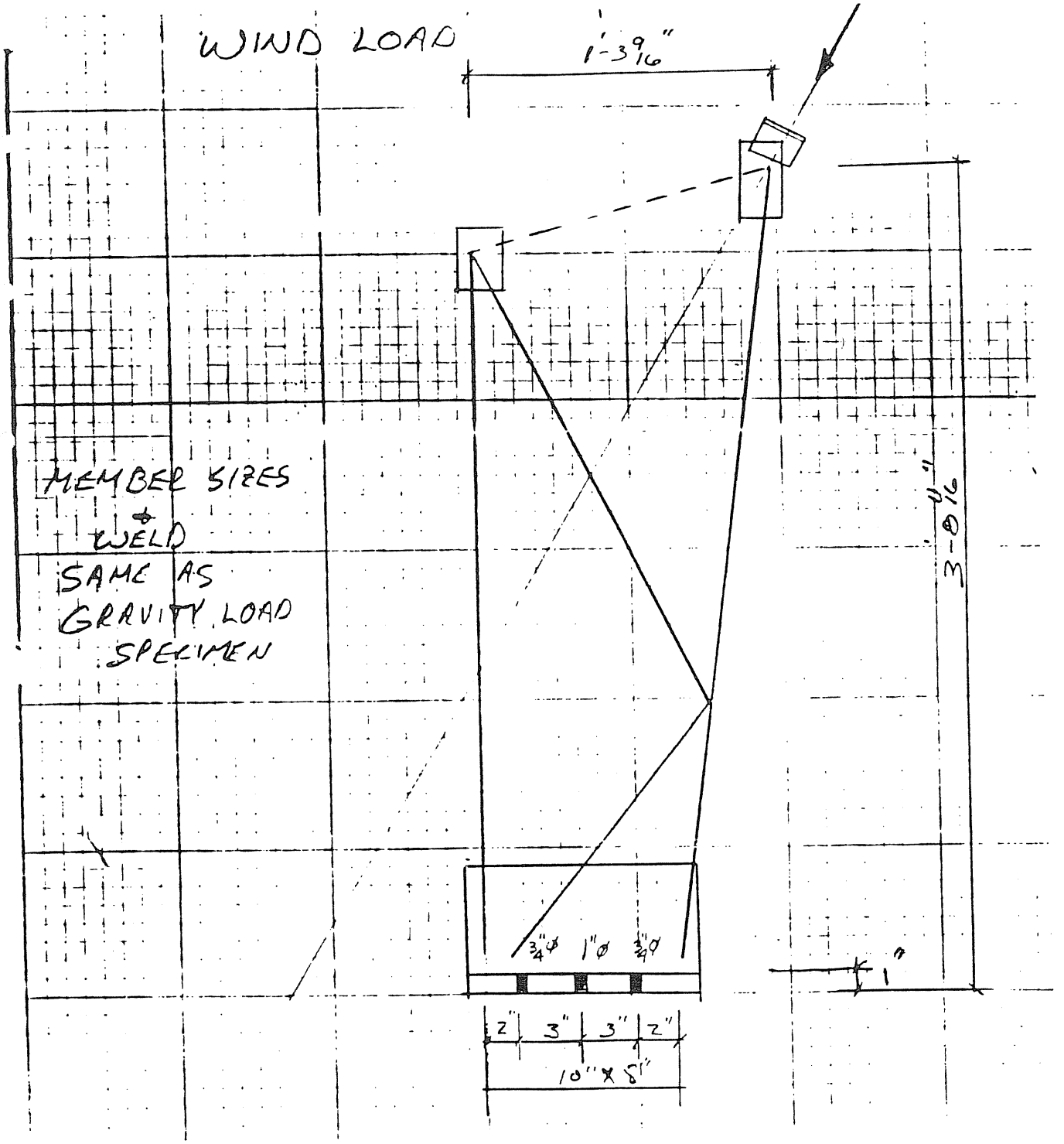

Figure E.20 Shop Details, Test CB-2

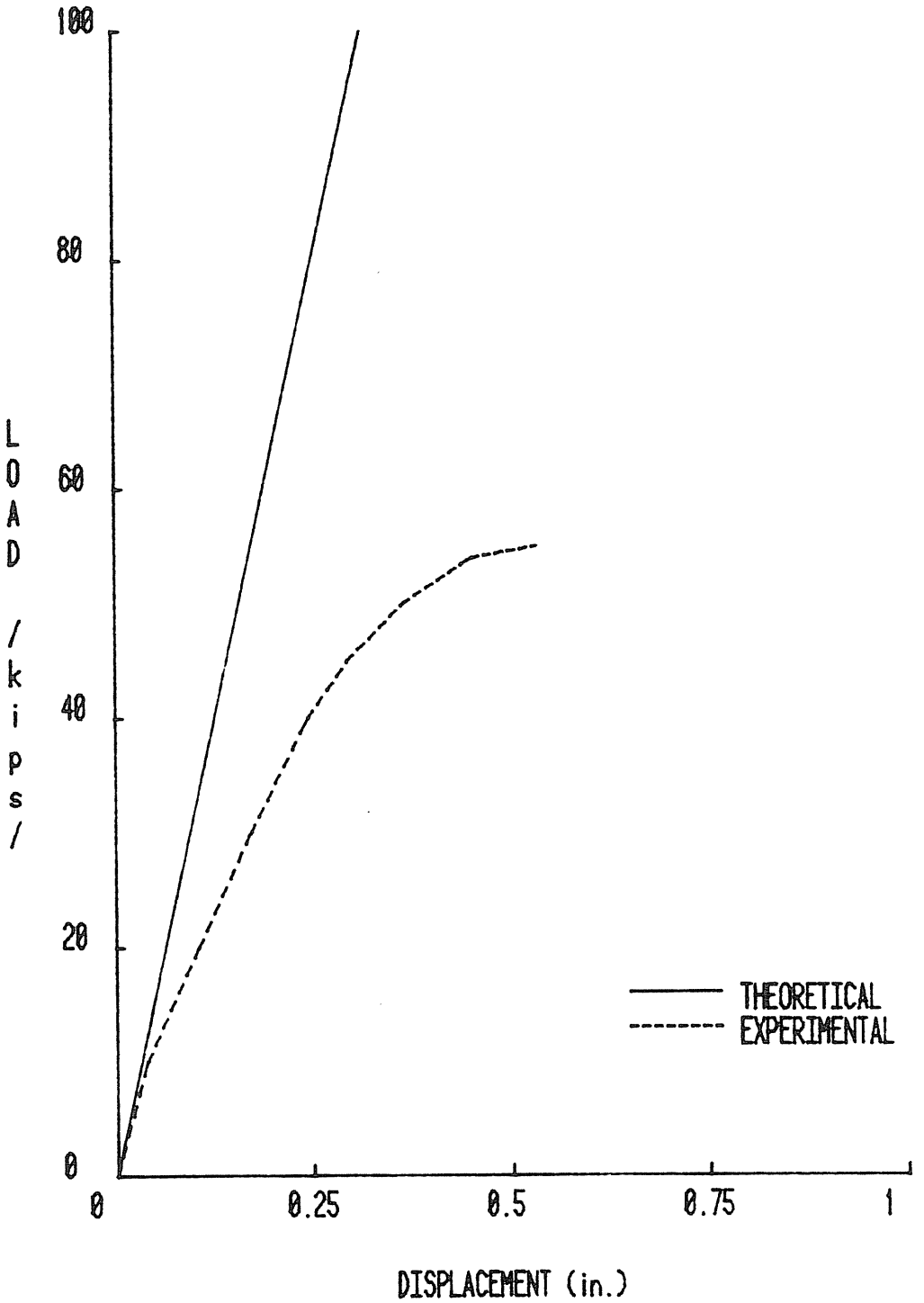

Figure E.21 Load vs. Displ. in Load Direction, CB-2

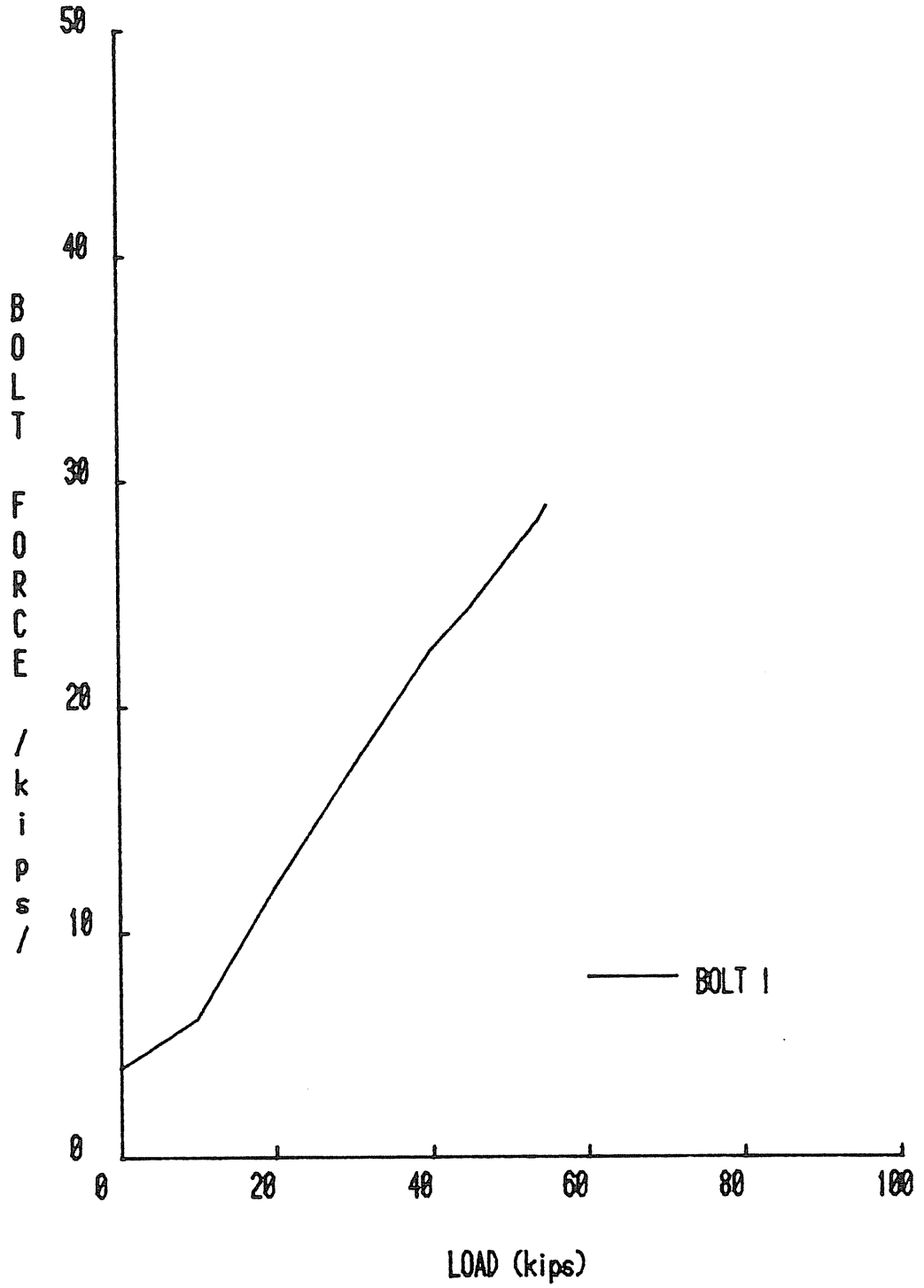

Figure E.22 Bolt Force vs. Load, CB-2

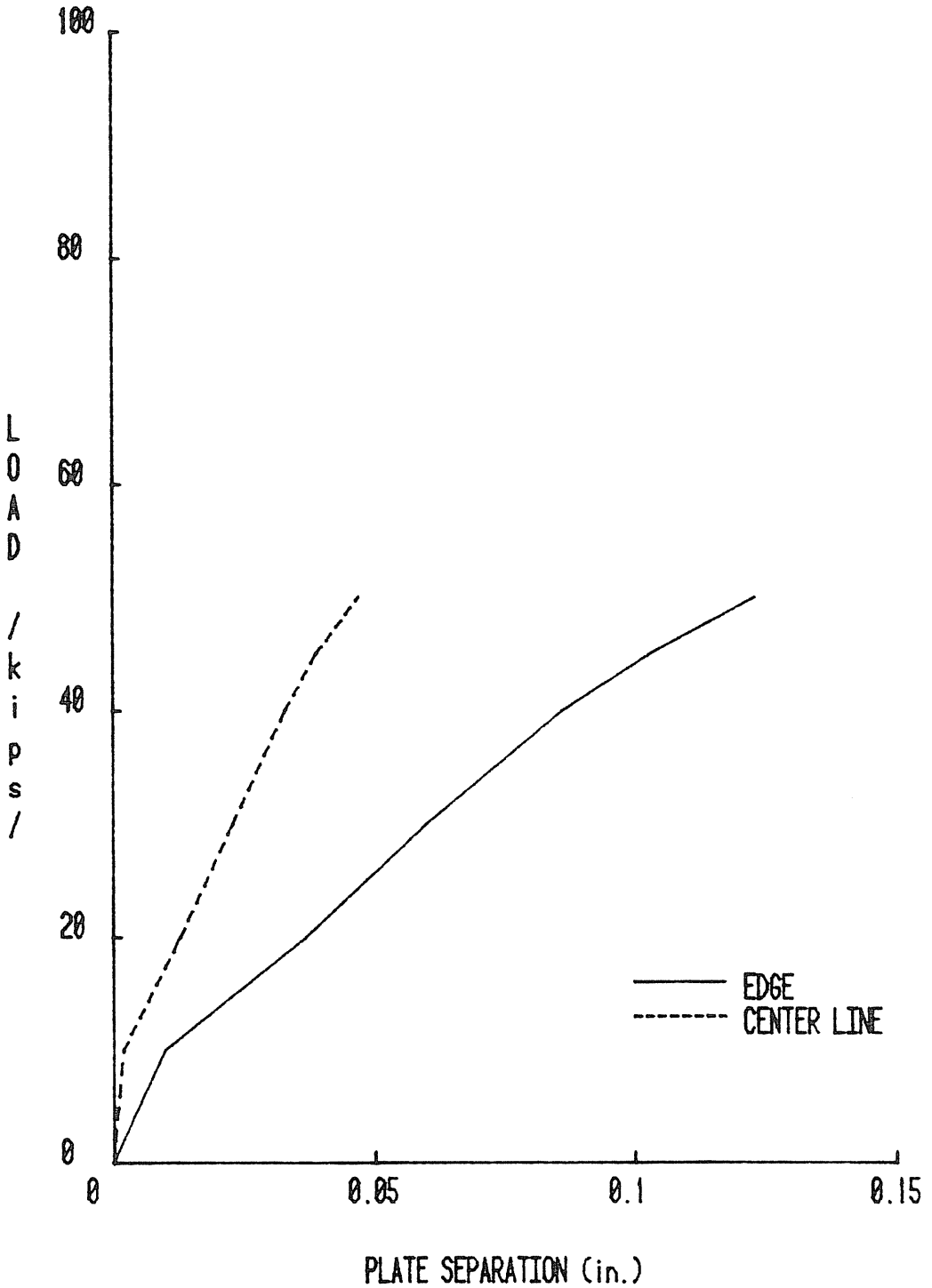

Figure E.23 Load vs. Plate Separation, CB-2

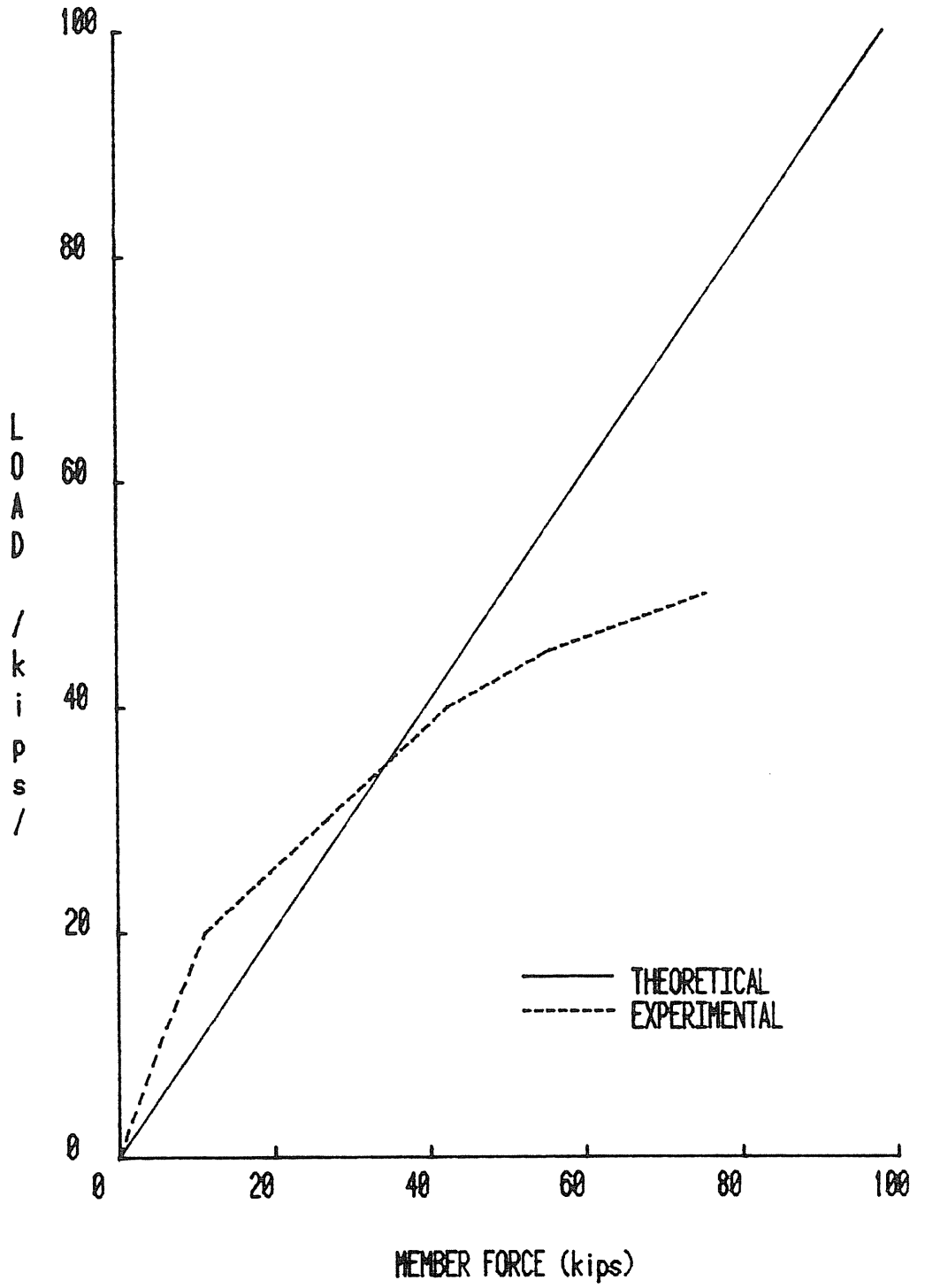

Figure E.24 Load vs. Member (#17) Force CB-2

VULCRAFT COLUMN BASE TEST SUMMARY

Project: VULCRAFT

Test No.: CB-3

Test Date: 6/12/84

Purpose: Study of Behavior of Column Base for Gravity Loading

Load Eccentricity: 1.44"

Base Plate Dimensions: 8x12x1 in.

Anchor Bolt Diameter: 1" No. of Anchor Bolts: 2"

Pretension Force per Anchor Bolt: 3 kips

Failure Load: 89 kips

Failure Mode: Buckling of diagonal member (#34)

Predicted Failure Loads:

Method:	Vulcraft Analysis	Load:	27.86x1.66 = 46.24 kips
Method:		Load:	
Method:		Load:	
Method:		Load:	

Maximum Displ. in Load Direction: 0.345" @ 89 kips

Maximum Plate Separation: 0.07" @ 89 kips

Discussion:

Observations:

-Failure occurred at 89 kips by buckling of diagonal member (#34).

-At 30 kips, minor yielding was observed on compression angles adjacent to the base plate.

-At 45 kips, some yielding detected on first diagonal of column.

-At 80 kips, widespread yield lines appeared throughout the length of the diagonal member.

Loading:

-Maximum applied load was 89 kips.

-Maximum bolt force was 13.64 on bolt #1 (North side bolt) at 89 kips applied load.

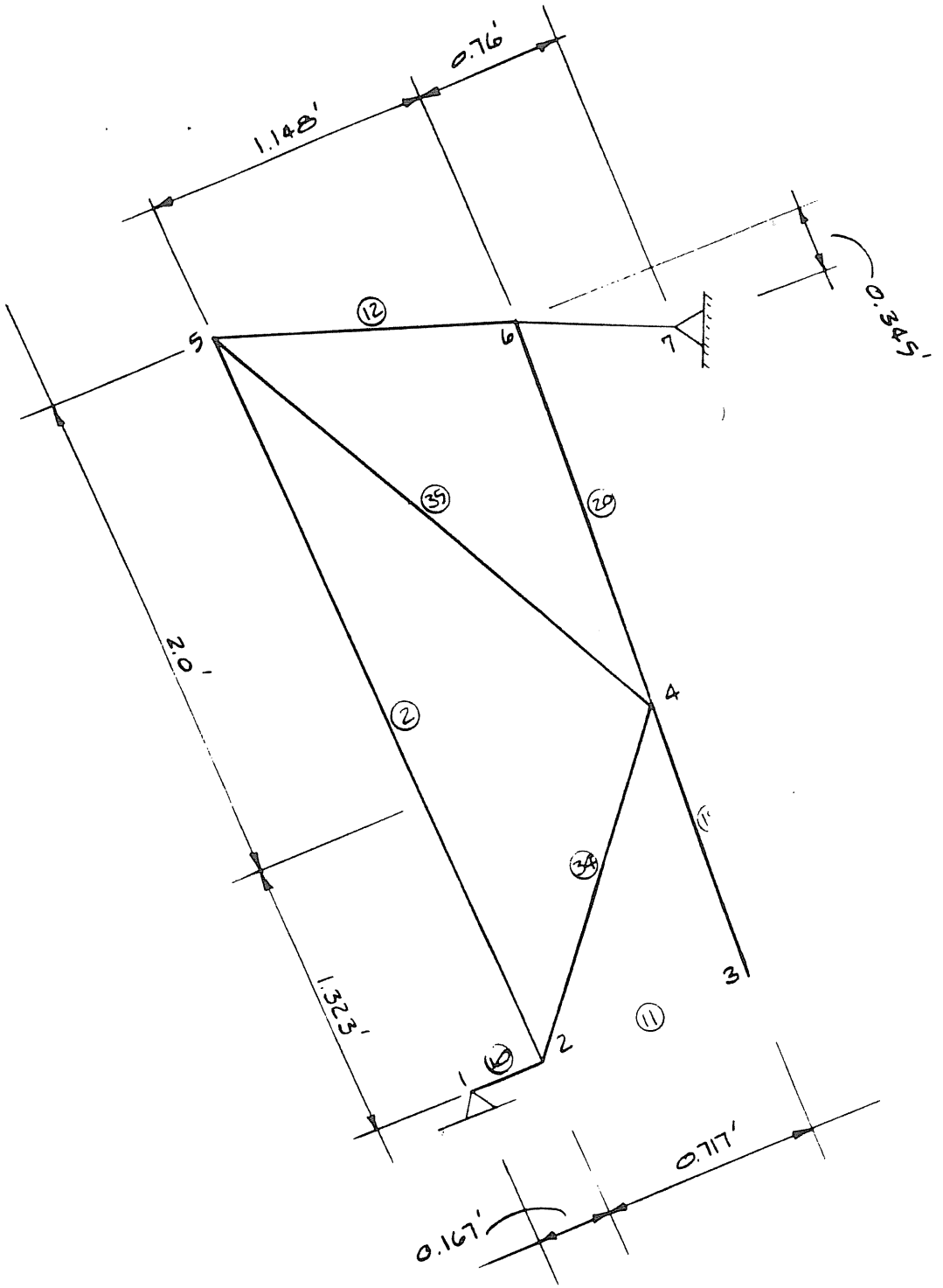

Figure E.25 Specimen Geometry, Test CB-3

```
*************************************************************
                    STIFFNESS ANALYSIS
                          OF
                       PLANE FRAMES
*************************************************************

 JOB NAME: VULCRAFT CB-3 & CB-4 FRAME, (WORKING LOAD=27.86 KIPS)
```

**** JOINT COORDINATES ****

JOINT	X-COORD (FT.)	Y-COORD (FT.)
1	-0.167	0.000
2	0.000	0.000
3	0.717	0.000
4	0.914	1.323
5	0.000	3.323
6	1.148	2.694
7	1.908	2.549

**** SUPPORT CONDITIONS ****

SUPPORT	X-DIR.	Y-DIR.	Z-DIR.
1	1	1	0
7	1	1	0

**** MEMBER INCIDENCES ****

MEMBER	I JOINT	J JOINT
10	1	2
11	2	3
2	2	5
12	5	6
13	6	7
19	3	4
20	4	6
34	2	4
35	4	5

Figure E.26 Stiffness Analysis, Test CB-3,

**** MEMBER PROPERTIES ****

MEMBER	AREA (IN^2)	INERTIA (IN^4)	ELASTICITY (K/IN^2)
10	8.25	98.00	29000.0
11	8.25	98.00	29000.0
2	1.25	0.48	29000.0
12	3.56	3.02	29000.0
13	100.00	0.00	29000.0
19	2.87	2.48	29000.0
20	2.87	2.48	29000.0
34	0.83	0.02	29000.0
35	1.52	0.58	29000.0

**** LOADING 1 **** DL+LL

** JOINT LOADS **

JOINT	FORCE X (K)	FORCE Y (K)	MOMENT Z (FT-K)
1	0.00	0.00	0.00
2	0.00	0.00	0.00
3	0.00	0.00	0.00
4	0.00	0.00	0.00
5	0.00	0.00	0.00
6	-11.53	-25.36	0.00
7	0.00	0.00	0.00

Figure E.26 Stiffness Analysis, Test CB-3, Continued

```
************************
* RESULTS OF ANALYSIS *
************************
```

JOB NAME: VULCRAFT CB-3 & CB-4 FRAME, (WORKING LOAD=27.88 KIPS)
LOADING 1 DL+LL

***** JOINT DISPLACEMENTS *****

JOINT	X-DIR. (IN)	Y-DIR. (IN)	Z-DIR. (RAD)
1	0.0000	0.0000	-0.0023
2	-0.0001	-0.0047	-0.0023
3	-0.0001	-0.0242	-0.0022
4	0.0027	-0.0242	0.0010
5	-0.0083	-0.0189	-0.0008
6	-0.0128	-0.0281	-0.0002
7	0.0000	0.0000	0.0047

***** REACTIONS *****

JOINT	FORCE X (K)	FORCE Y (K)	MOMENT Z (FT-K)
1	11.523	25.360	0.000
7	0.007	0.000	0.000

Figure E.26 Stiffness Analysis, Test CB-3, Continued

***** MEMBER END ACTIONS -- LOCAL COORDINATES *****

MEMBER	JOINT	AXIAL (K)	SHEAR (K)	MOMENT (FT-K)
10	1	11.52	25.36	0.00
	2	-11.52	-25.36	4.24
11	2	1.11	-2.38	-3.88
	3	-1.11	2.38	2.17
2	2	12.93	-0.18	-0.35
	5	-12.93	0.18	-0.26
12	5	6.75	1.16	0.41
	6	-6.75	-1.16	1.01
13	6	-0.01	0.00	0.00
	7	0.01	0.00	0.00
19	3	-2.19	-1.45	-2.17
	4	2.19	1.45	0.24
20	4	27.05	-0.82	-0.28
	6	-27.05	0.82	-1.01
34	2	18.00	0.00	-0.01
	4	-18.00	0.00	0.01
35	4	-15.64	-0.05	0.04
	5	15.64	0.05	-0.15

Figure E.26 Stiffness Analysis, Test CB-3, Continued

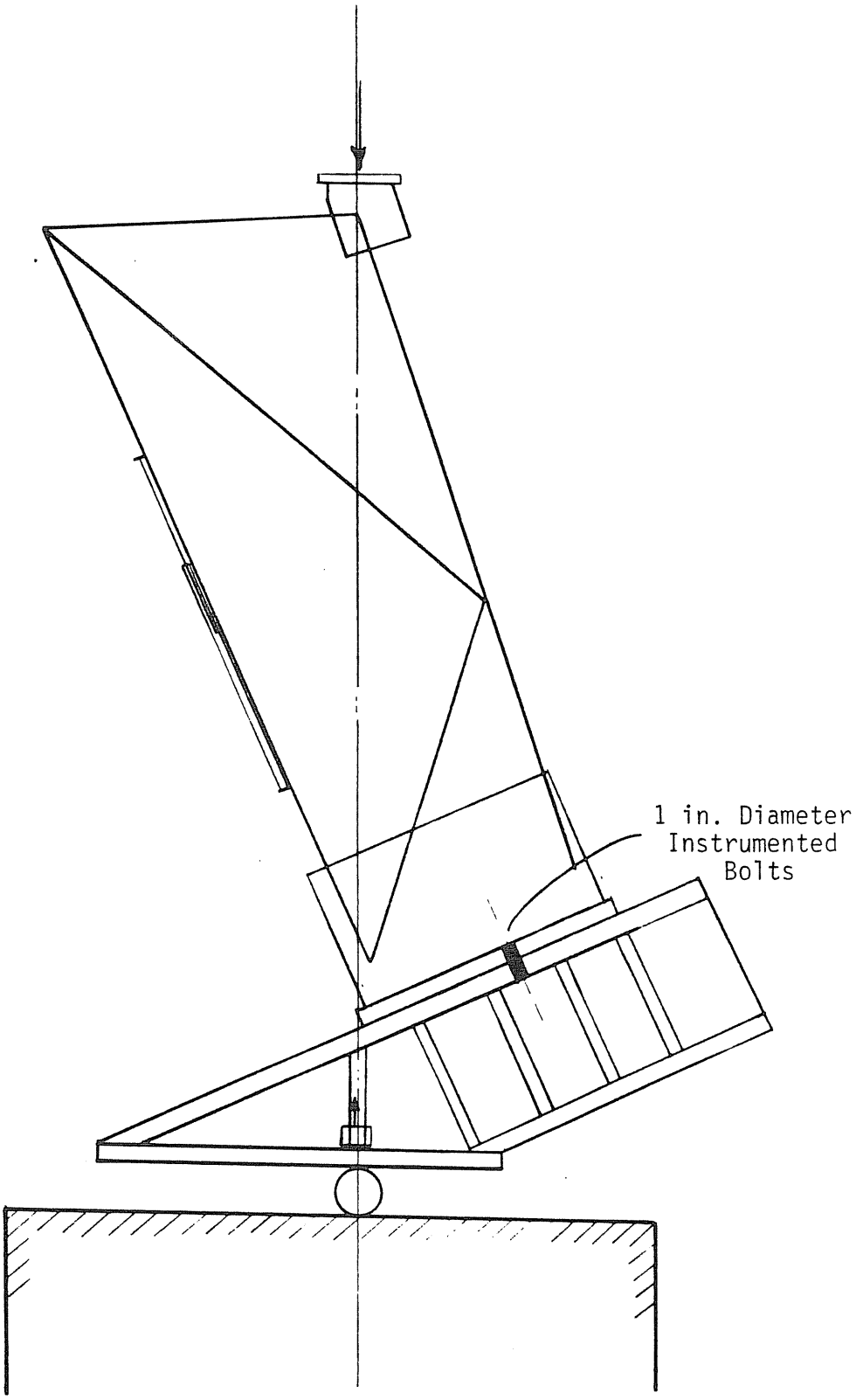

Figure E.27 Test Setup, Test CB-3

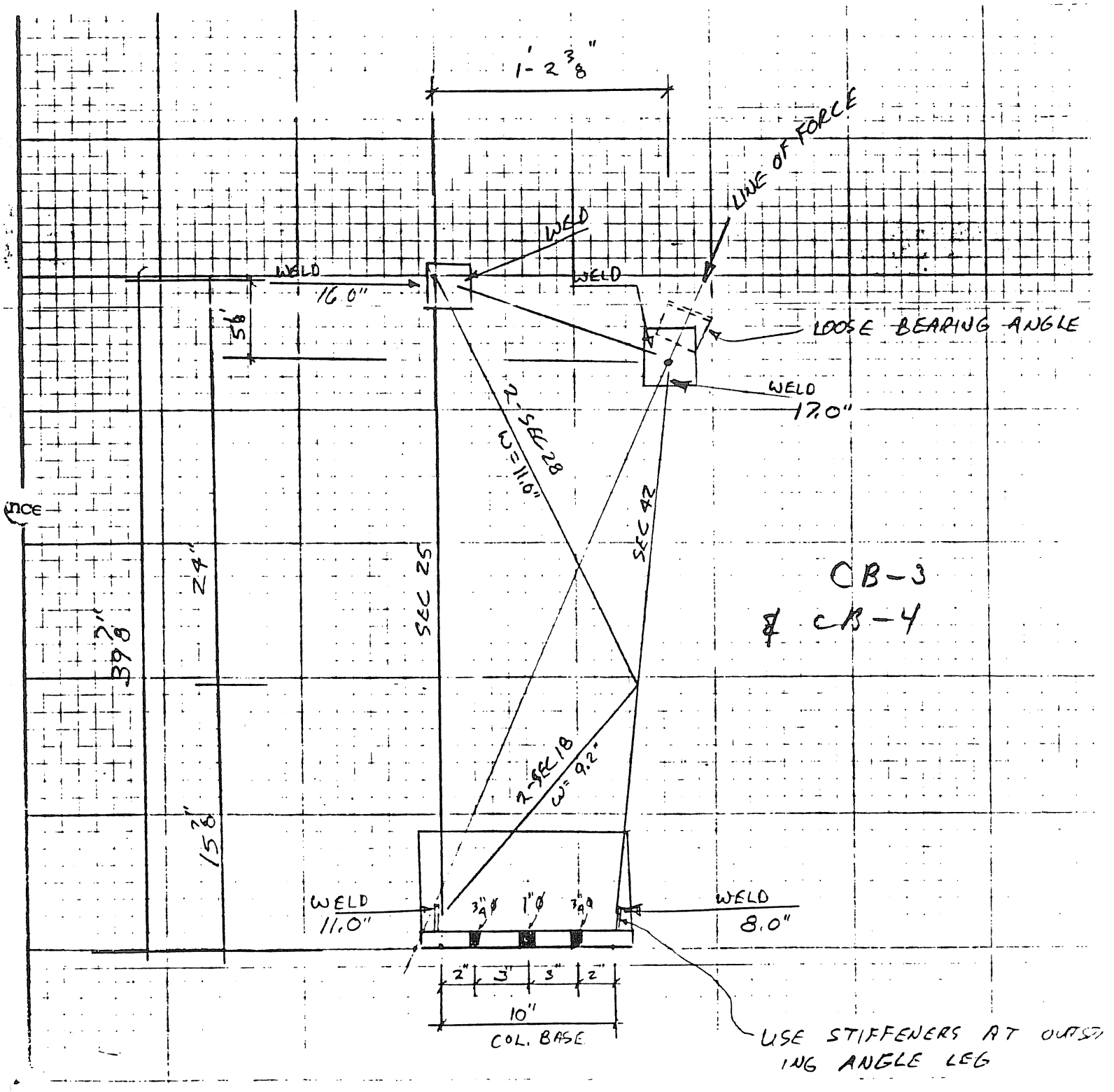

Figure E.28 Shop Details, Test CB-3

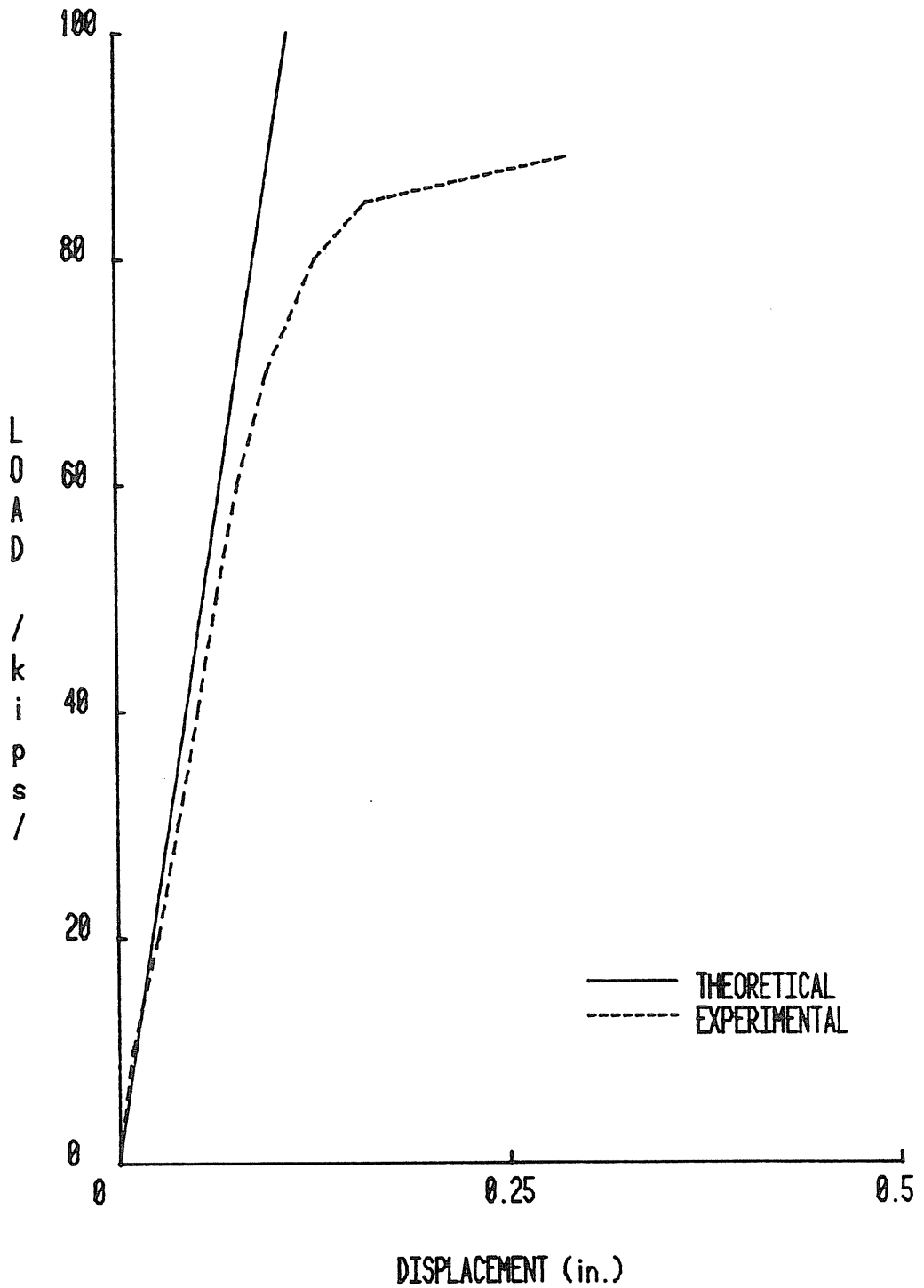

Figure E.29 Load vs. Displ. in Load Direction, CB-3

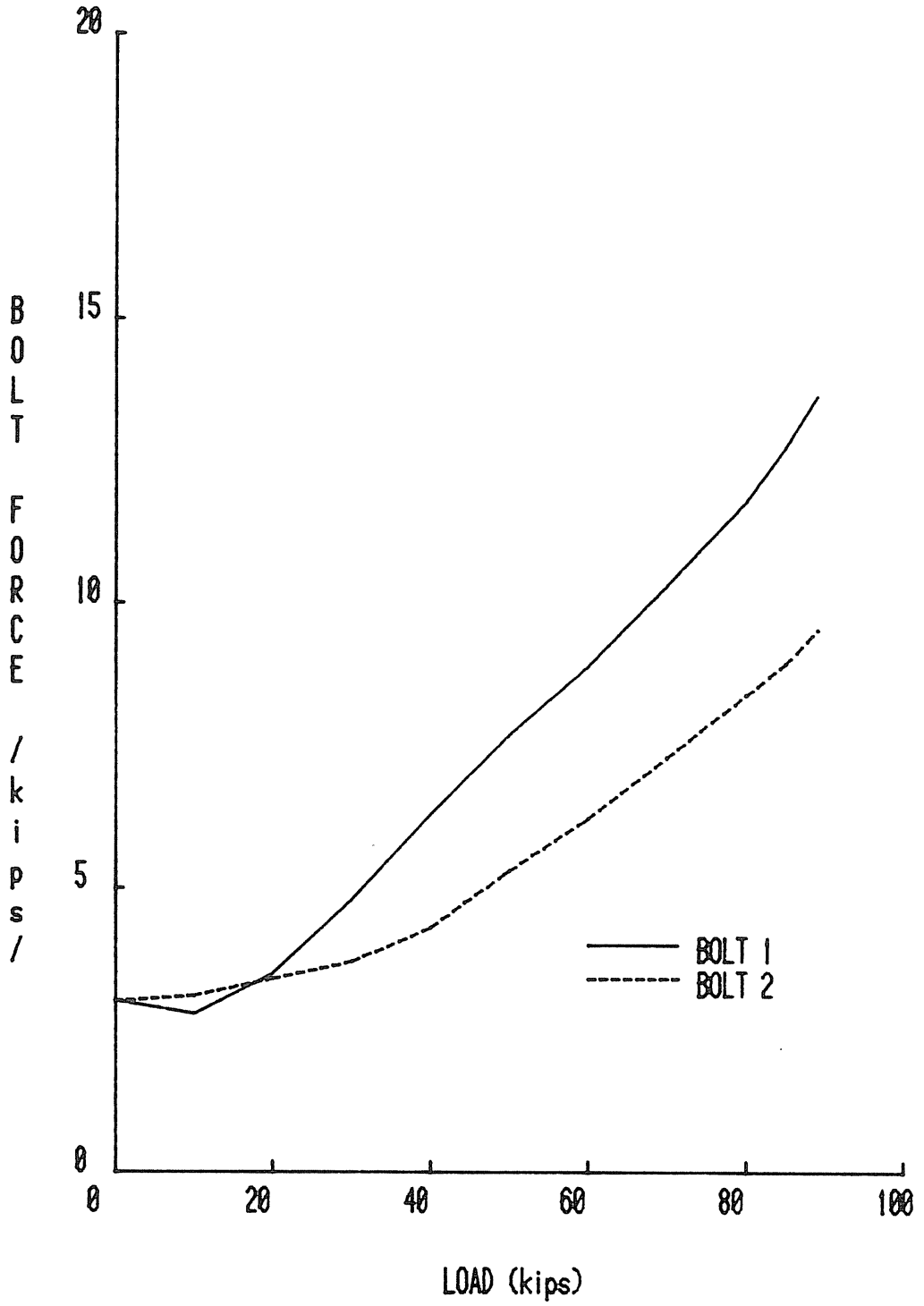

Figure E.30 Bolt Force vs. Load, CB-3

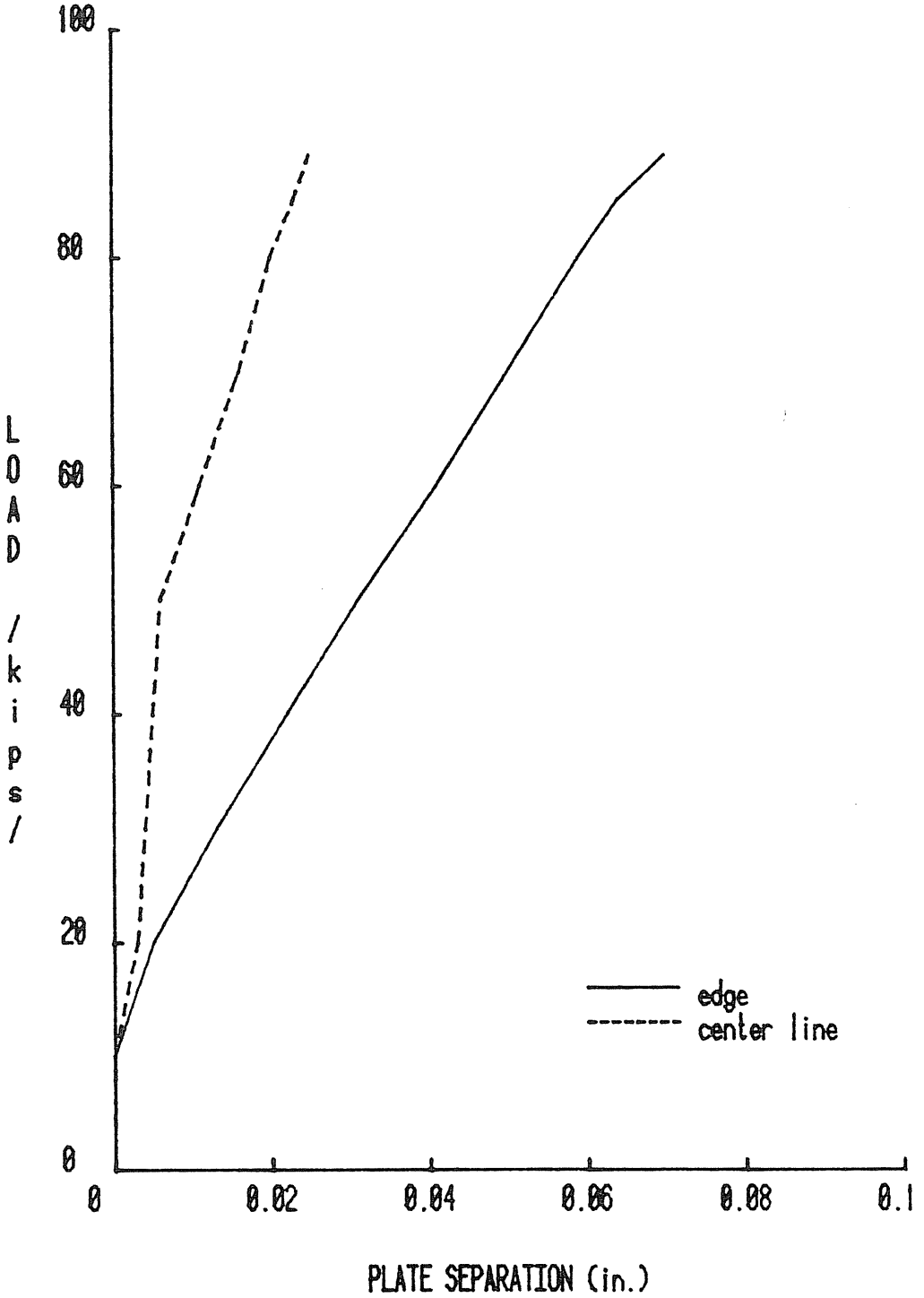

Figure E.31 Load vs. Plate Separation, CB-3

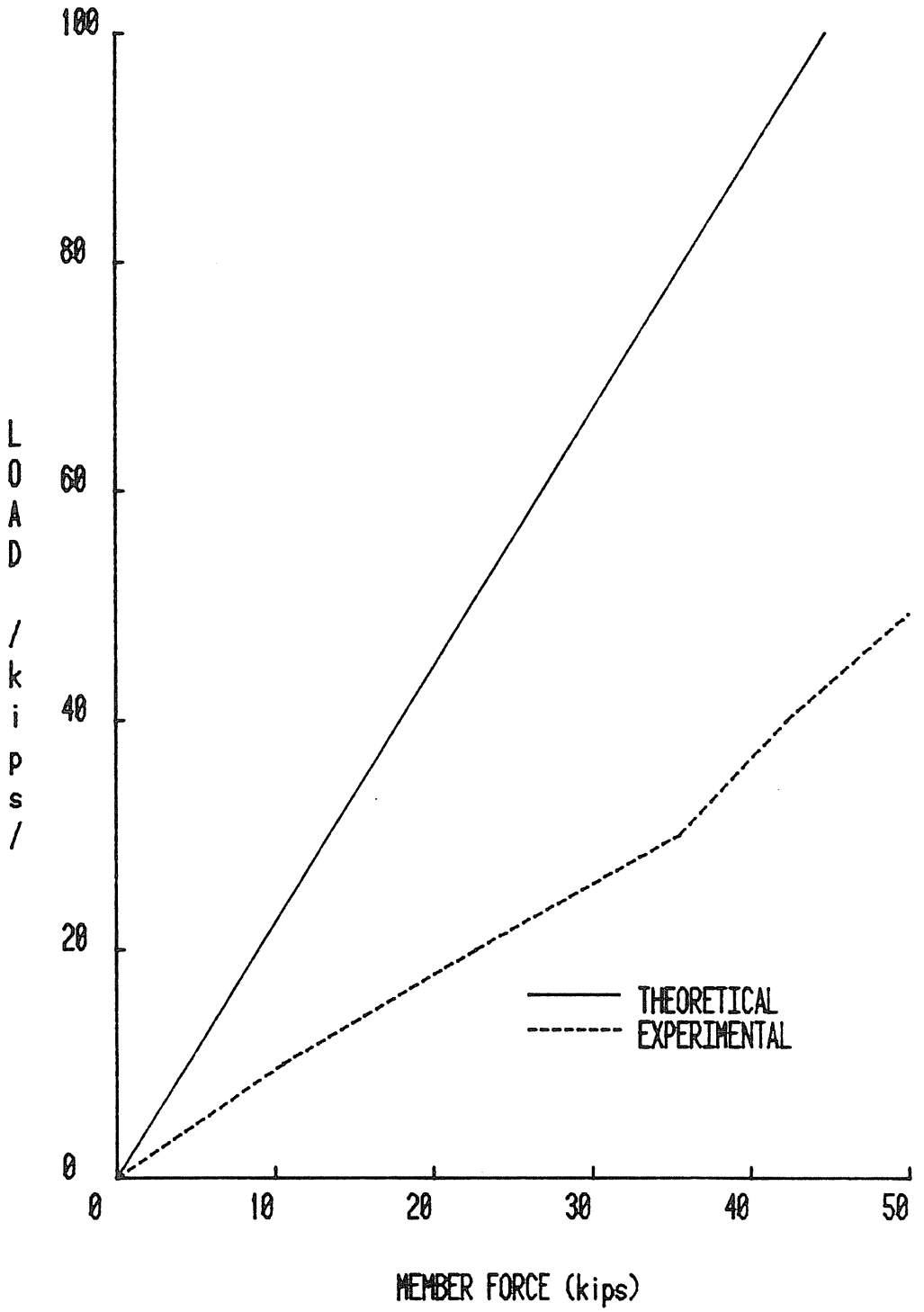

Figure E.32 Load vs. Member (#17) Force, CB-3

VULCRAFT COLUMN BASE TEST SUMMARY

Project: VULCRAFT

Test No.: CB-4

Test Date: 6/12/84

Purpose: Study of Behavior of Column Base for Gravity Loading

Load Eccentricity: 1.44"

Base Plate Dimensions: 8x12x1 inch

Anchor Bolt Diameter: 3/4" **No. of Anchor Bolts:** 4

Pretension Force per Anchor Bolt: 4 kips

Failure Load: 83 kips

Failure Mode: Buckling of diagonal member (#34)

Predicted Failure Loads:

Method:	Vulcraft Analysis	**Load:**	27.86x1.66 = 46.24 kips
Method:		**Load:**	
Method:		**Load:**	
Method:		**Load:**	

Maximum Displ. in Load Direction: 0.215" @ 83 kips

Maximum Plate Separation: 0.02" @ 83 kips

Discussion:

Observations:

-Failure occurred at 83 kips by buckling of diagonal member (#34).

-At 15 kips, some yielding was observed at compression side of column base adjacent to the base plate.

-At 50 kips yielding was detected on first diagonal of column.

-At 65 kips, the first diagonal member in column experienced severe yielding.

Loading:

-Maximum applied load was 83 kips.

-Maximum bolt force was 7.5 kips on bolt #2 (South side) at 70 kips applied load.

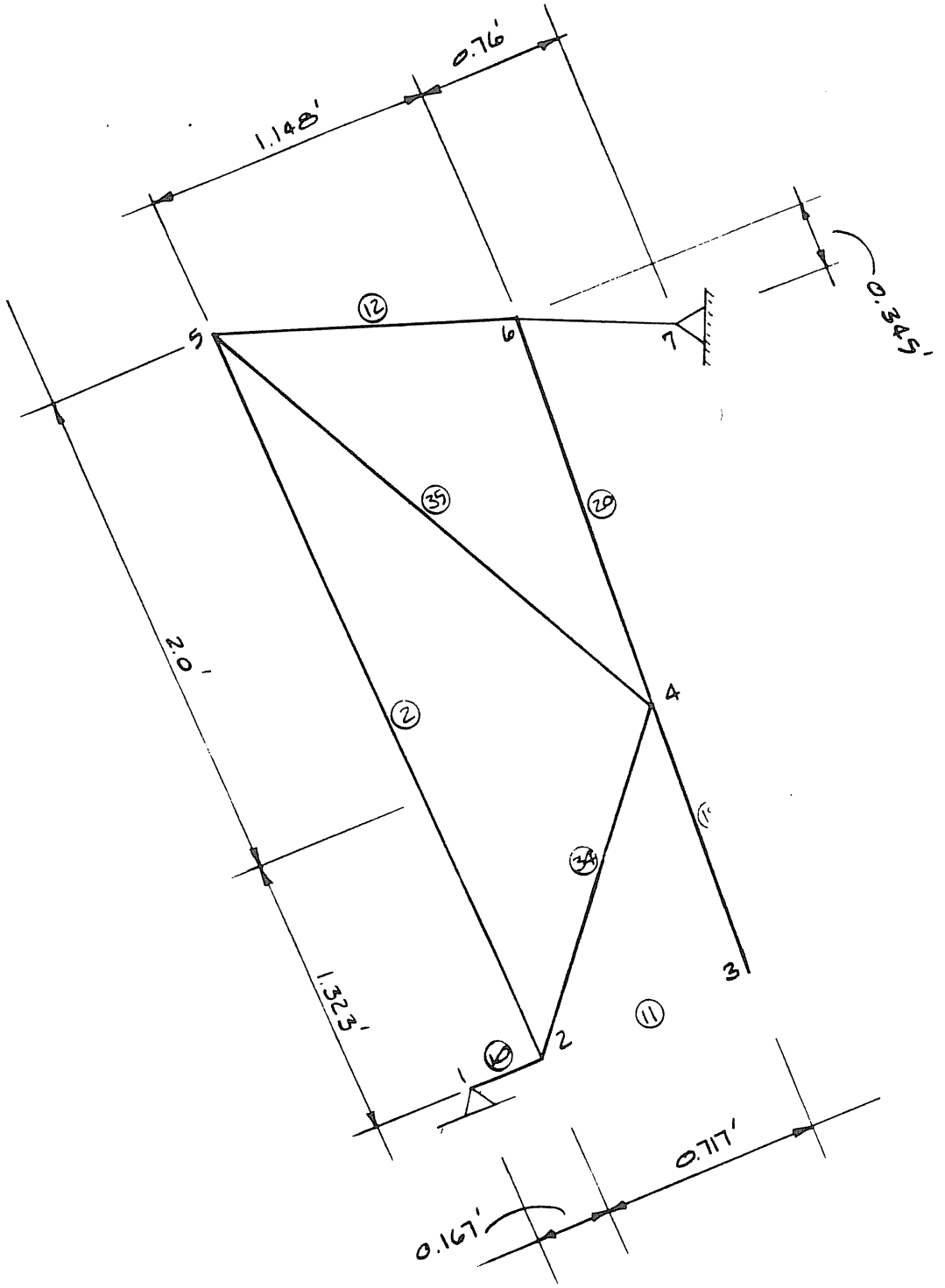

Figure E.33 Specimen Geometry, Test CB-4

```
*****************************************************************
                    STIFFNESS ANALYSIS
                         ØF
                    PLANE FRAMES
*****************************************************************

 JOB NAME: VULCRAFT CB-3 & CB-4 FRAME, (WORKING LOAD=27.86 KIPS)


**** JOINT COORDINATES ****

JOINT    X-COORD    Y-COORD
         ( FT. )    ( FT. )

   1     -Ø.167      Ø.ØØØ
   2      Ø.ØØØ      Ø.ØØØ
   3      Ø.717      Ø.ØØØ
   4      Ø.914      1.3Ø3
   5      Ø.ØØØ      3.3Ø3
   6      1.148      2.894
   7      1.9Ø8      2.549


**** SUPPORT CONDITIONS ****

 SUPPORT   X-DIR.   Y-DIR.   Z-DIR.
     1        1        1        Ø
     7        1        1        Ø


**** MEMBER INCIDENCES ****

 MEMBER    I JOINT    J JOINT
   1Ø          1          2
   11          2          3
    2          2          5
   12          5          6
   13          6          7
   19          3          4
   2Ø          4          6
   34          2          4
   35          4          5
```

Figure E.34 Stiffness Analysis, Test CB-4,

**** MEMBER PROPERTIES ****

MEMBER	AREA (IN^2)	INERTIA (IN^4)	ELASTICITY (K/IN^2)
10	8.25	98.00	29000.0
11	8.25	98.00	29000.0
2	1.25	0.48	29000.0
12	3.56	3.02	29000.0
13	100.00	0.00	29000.0
19	2.87	2.48	29000.0
20	2.87	2.48	29000.0
34	0.83	0.02	29000.0
35	1.52	0.58	29000.0

**** LOADING 1 **** DL+LL

** JOINT LOADS **

JOINT	FORCE X (K)	FORCE Y (K)	MOMENT Z (FT-K)
1	0.00	0.00	0.00
2	0.00	0.00	0.00
3	0.00	0.00	0.00
4	0.00	0.00	0.00
5	0.00	0.00	0.00
6	-11.53	-25.36	0.00
7	0.00	0.00	0.00

Figure E.34 Stiffness Analysis, Test CB-4, Continued

```
************************
* RESULTS OF ANALYSIS *
************************
```

JOB NAME: VULCRAFT CB-3 & CB-4 FRAME, (WORKING LOAD=27.86 KIPS)
LOADING 1 DL+LL

***** JOINT DISPLACEMENTS *****

JOINT	X-DIR. (IN)	Y-DIR. (IN)	Z-DIR. (RAD)
1	0.0000	0.0000	-0.0023
2	-0.0001	-0.0047	-0.0023
3	-0.0001	-0.0242	-0.0022
4	0.0027	-0.0242	0.0010
5	-0.0083	-0.0189	-0.0008
6	-0.0128	-0.0281	-0.0002
7	0.0000	0.0000	0.0047

***** REACTIONS *****

JOINT	FORCE X (K)	FORCE Y (K)	MOMENT Z (FT-K)
1	11.523	25.360	0.000
7	0.007	0.000	0.000

Figure E.34 Stiffness Analysis, Test CB-4, Continued

***** MEMBER END ACTIONS -- LOCAL COORDINATES *****

MEMBER	JOINT	AXIAL (K)	SHEAR (K)	MOMENT (FT-K)
10	1	11.52	25.36	0.00
	2	-11.52	-25.36	4.24
11	2	1.11	-2.38	-3.88
	3	-1.11	2.38	2.17
2	2	12.93	-0.18	-0.35
	5	-12.93	0.18	-0.26
12	5	6.75	1.16	0.41
	6	-6.75	-1.16	1.01
13	6	-0.01	0.00	0.00
	7	0.01	0.00	0.00
19	3	-2.19	-1.45	-2.17
	4	2.19	1.45	0.24
20	4	27.05	-0.82	-0.28
	6	-27.05	0.82	-1.01
34	2	18.00	0.00	-0.01
	4	-18.00	0.00	0.01
35	4	-15.64	-0.05	0.04
	5	15.64	0.05	-0.15

Figure E.34 Stiffness Analysis, Test CB-4, Continued

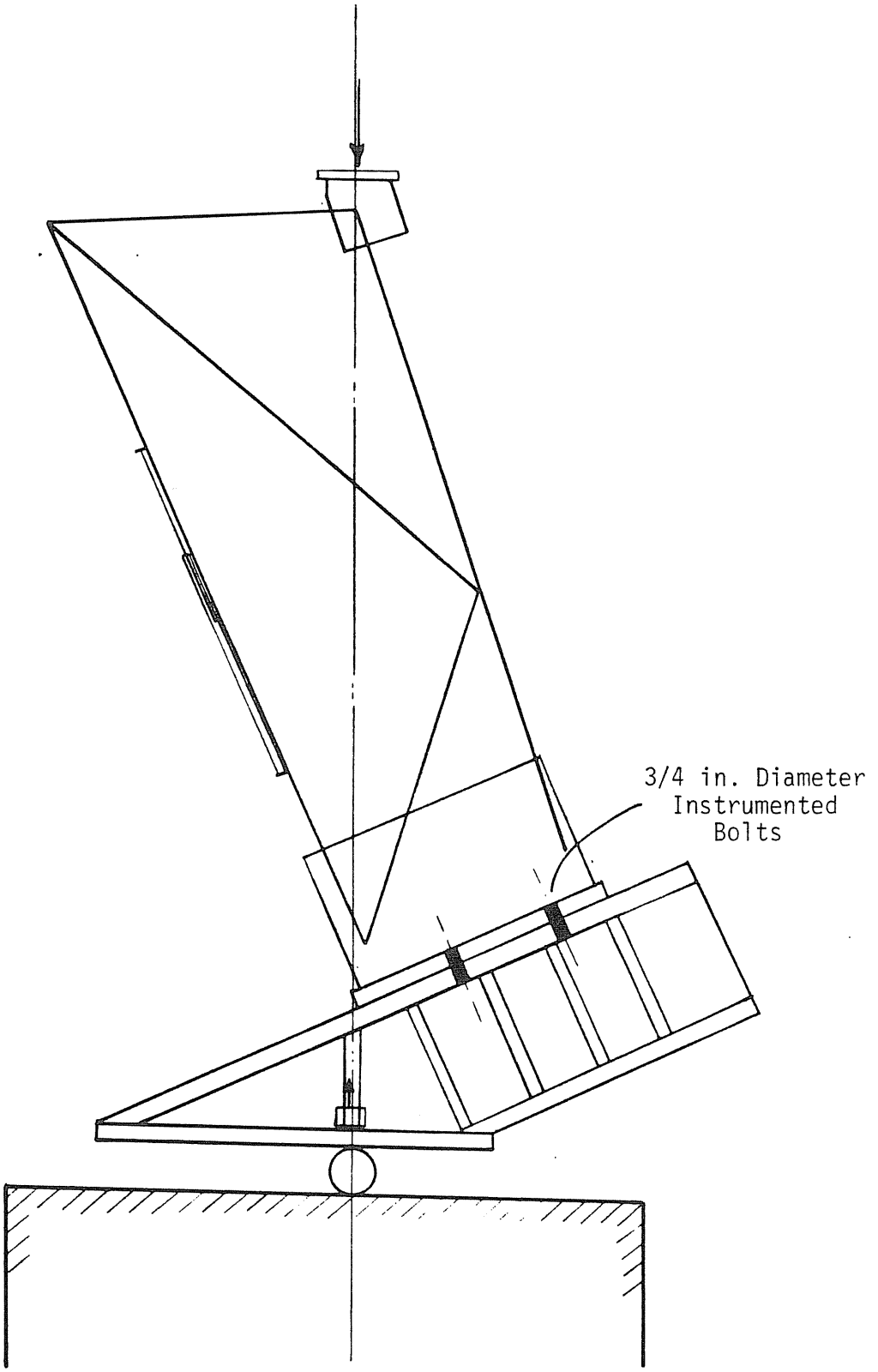

Figure E.35 Test Setup, Test CB-4

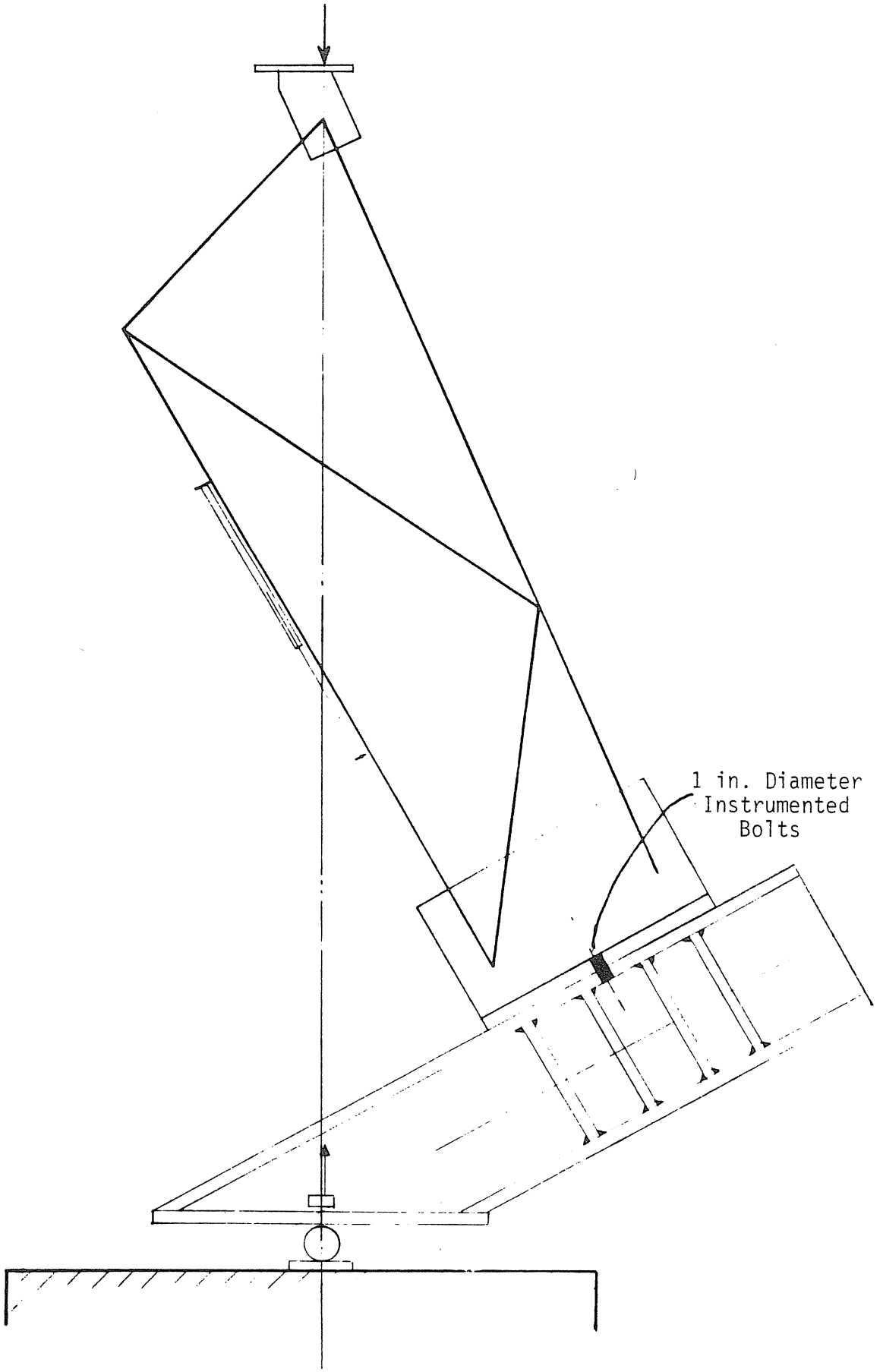

Figure E.11 Test Setup, Test CB-1B

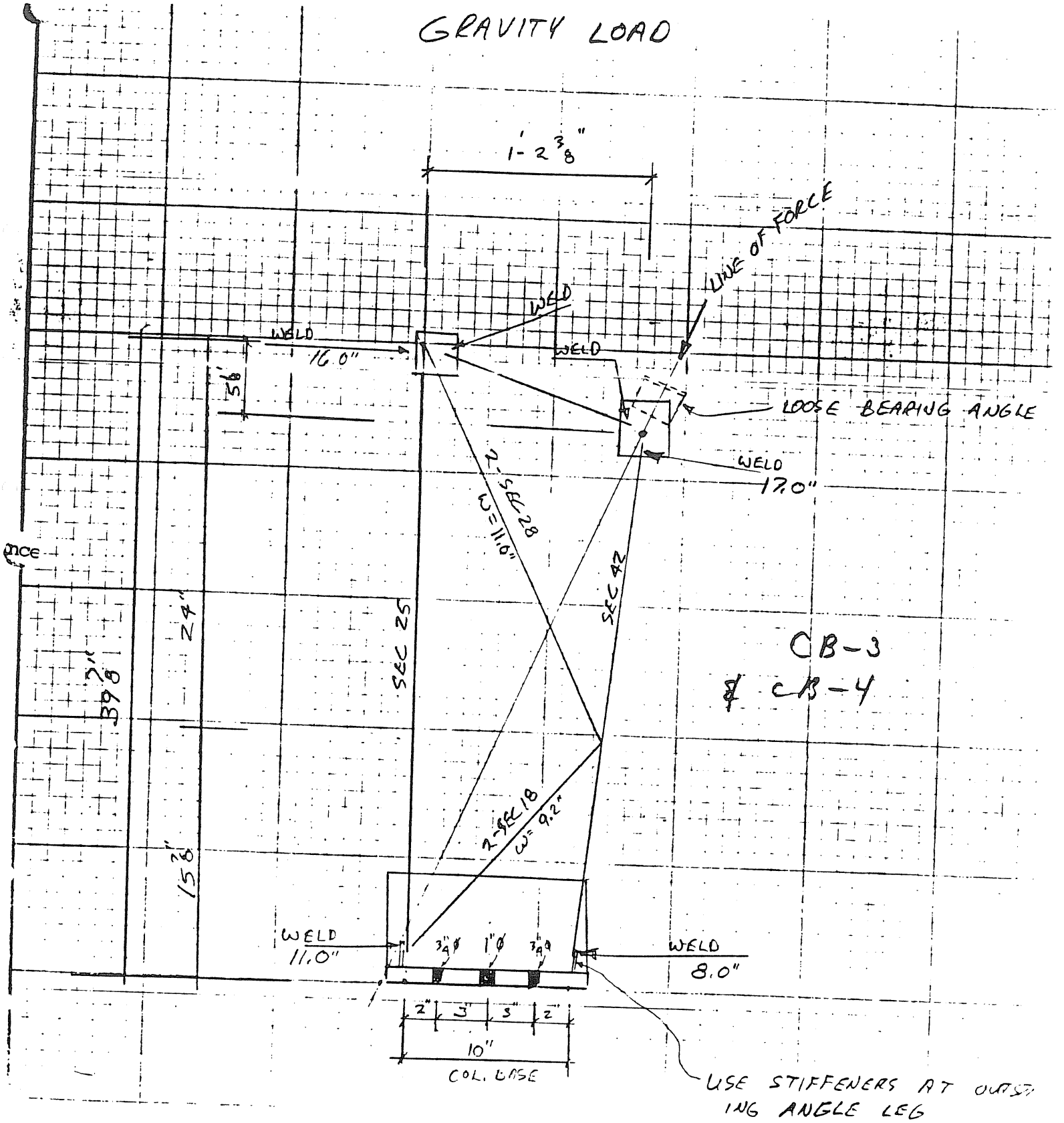

Figure E.36 Shop Details, Test CB-4

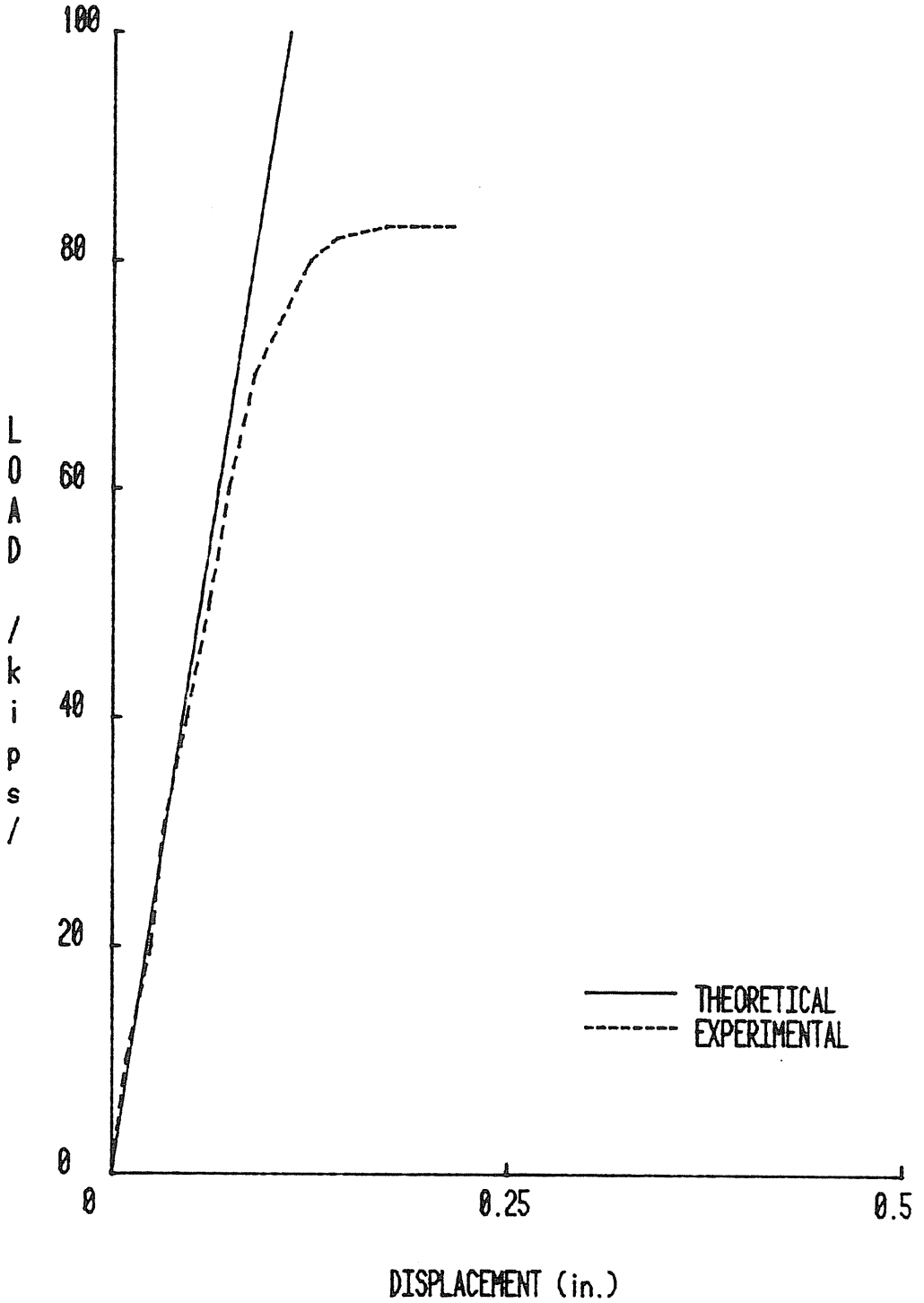

Figure E.37 Load vs. Displ. in Load Direction, CB-4

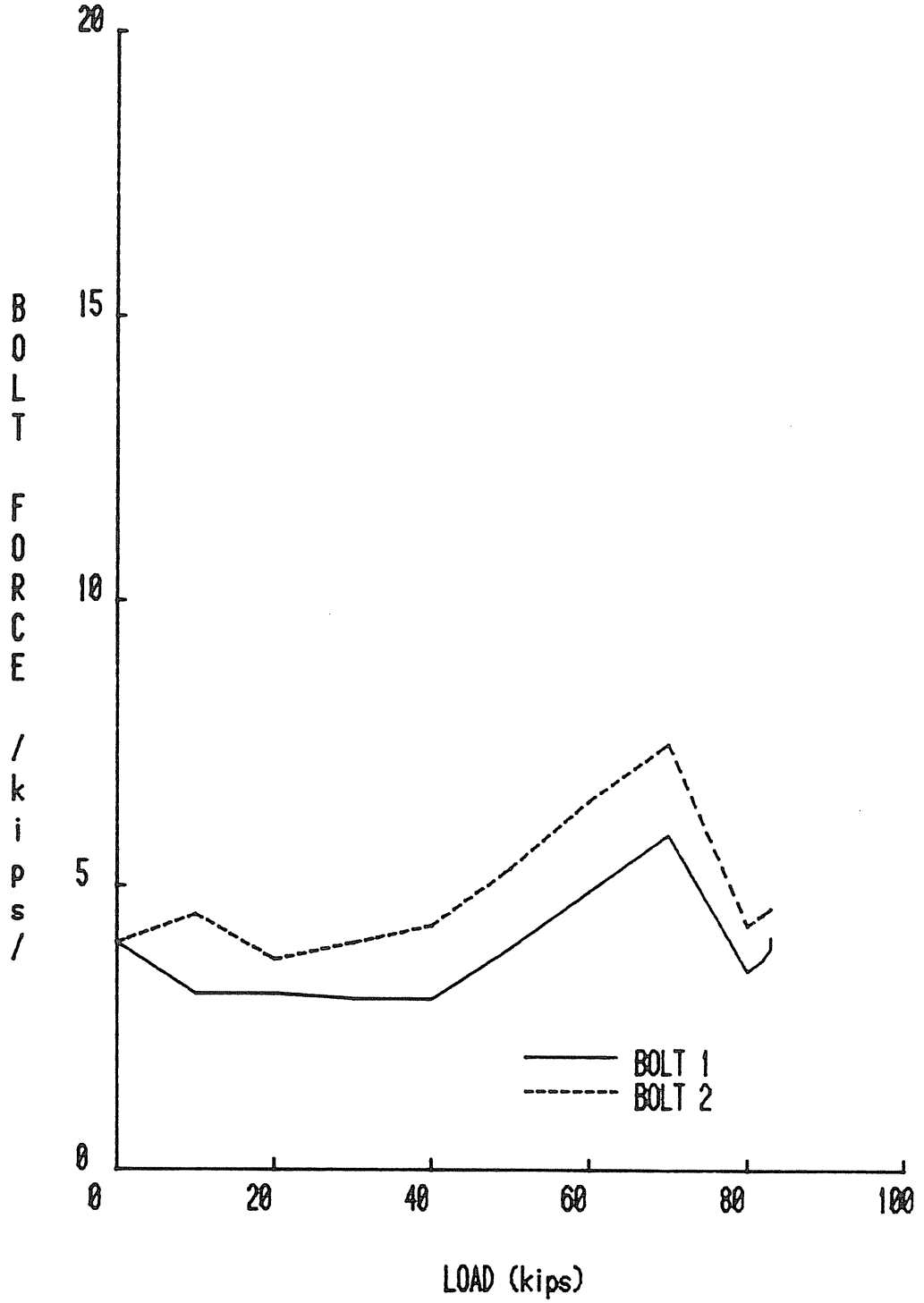

Figure E.38 Bolt Force vs. Load, CB-4

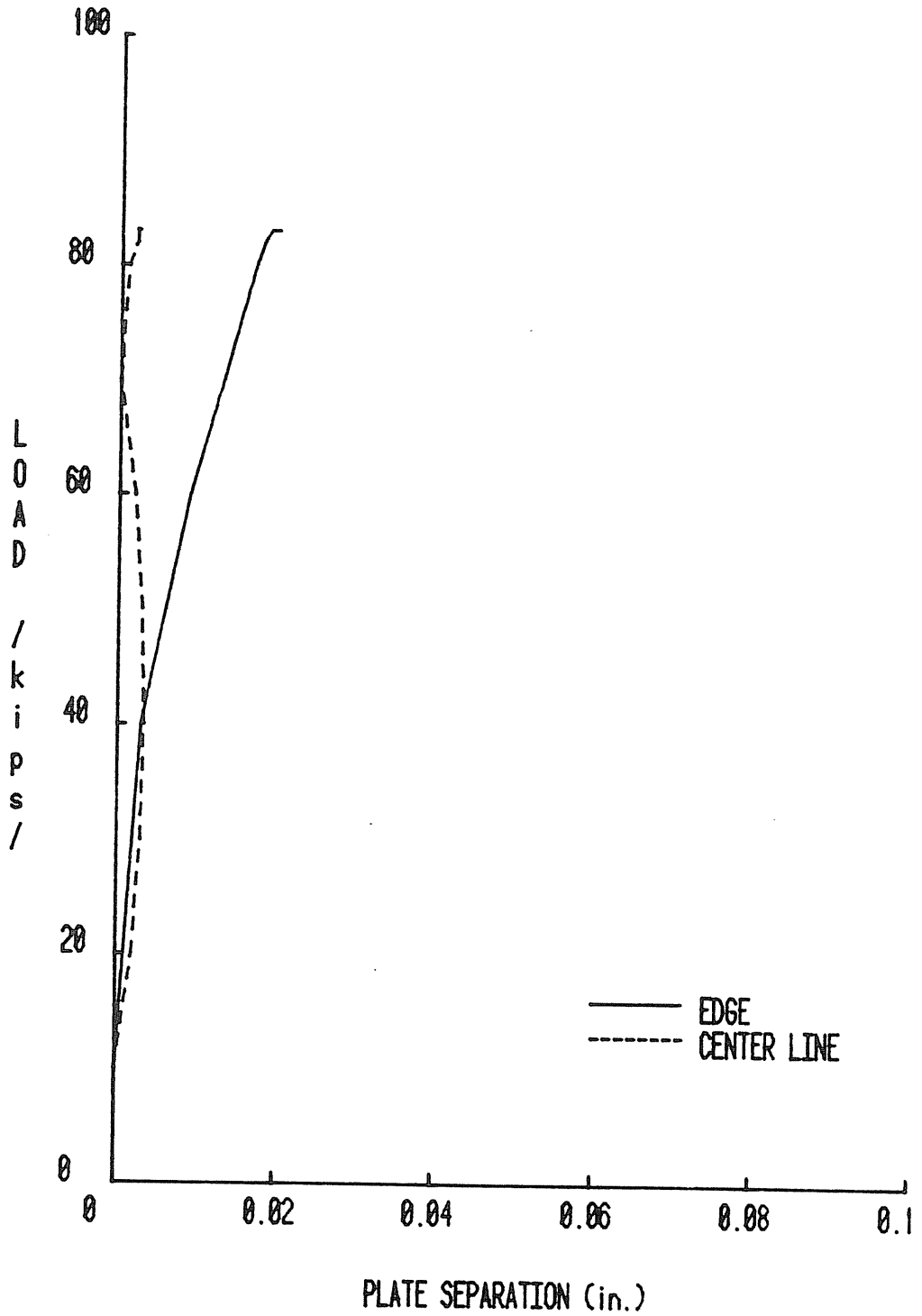

Figure E.39 Load vs. Plate Separation, CB-4

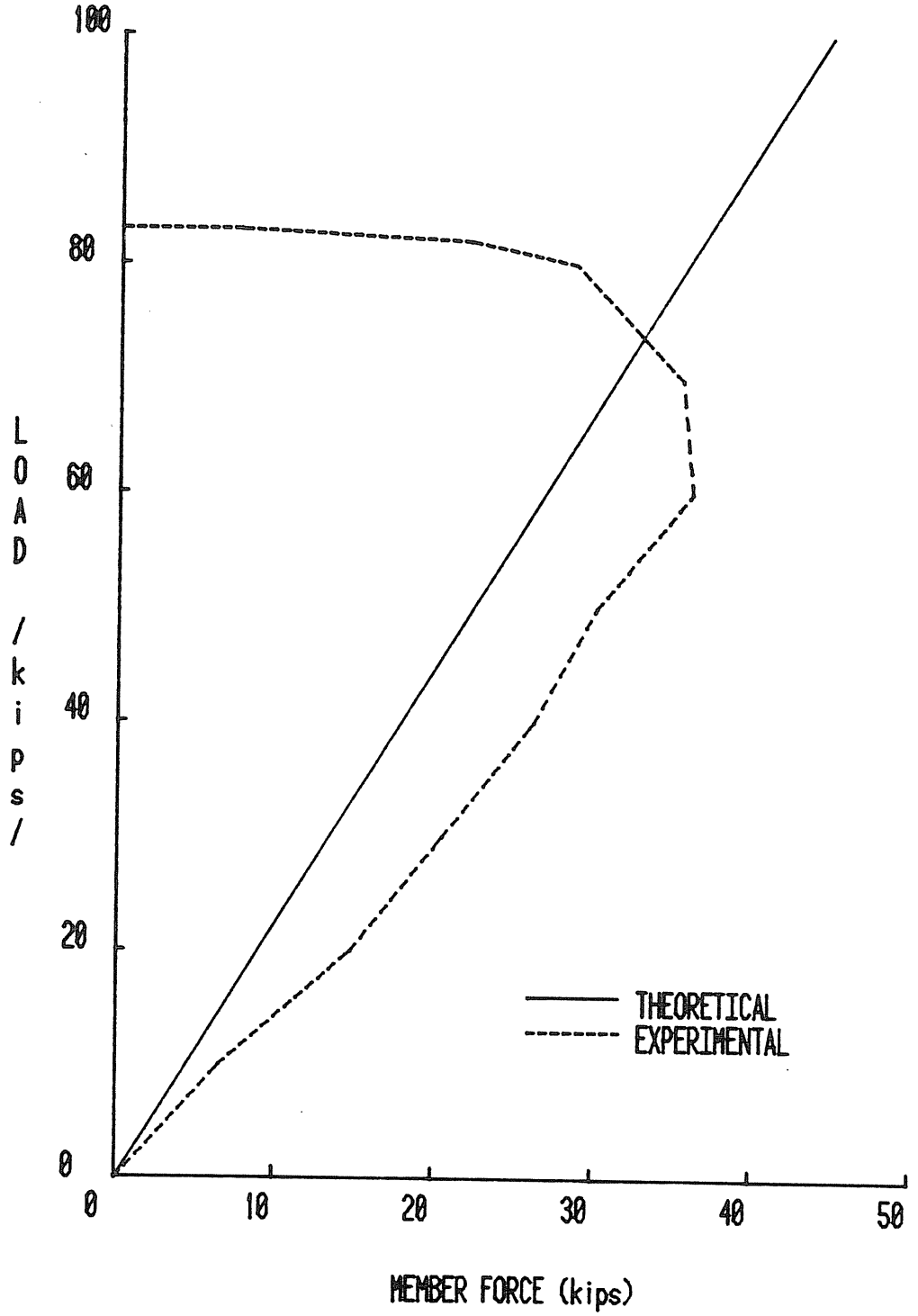

Figure E.40 Load vs. Member (#17) Force, CB-4